9866A PRINTER
SERVICE MANUAL

09866-90030
Revised January 1975

Computer Museum

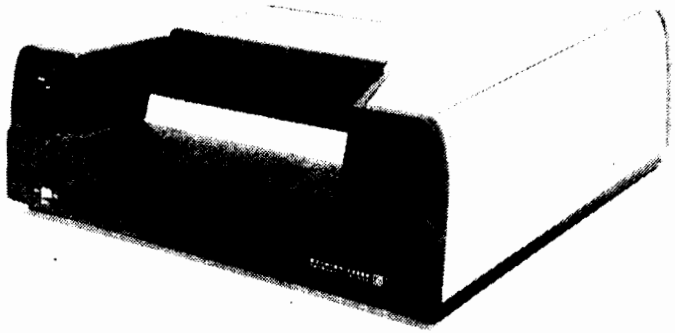

TABLE OF CONTENTS

CHAPTER 1. INTRODUCTION
GENERAL INFORMATION 1-1
SCOPE OF THE MANUAL 1-2
SERVICE CONCEPT 1-2
THE 9866A SERFICE KIT — 11291A 1-3

CHAPTER 2. INSTALLATION
POWER REQUIREMENTS 2-1
FUSES 2-1
GROUNDING REQUIREMENTS 2-2
CALCULATOR/PRINTER CONNECTIONS 2-2
9866A PRINTER INTERFACING 2-5
Recommended Circuits 2-9

CHAPTER 3. THEORY OF OPERATION
THE PRINTING PROCESS 3-1
GENERAL THEORY OF OPERATION 3-2
FLOW CHART EXPLANATION 3-6
LOW VOLTAGE POWER SUPPLIES 3-9
MOTOR DRIVE ASSEMBLY 3-10

CHAPTER 4. ASSEMBLY ACCESS
DISASSEMBLY PROCEDURE 4-1
PRINTHEAD ALIGNMENT PROCEDURE 4-3

CHAPTER 5. TROUBLESHOOTING & REPAIR
CHASSIS 5-1
LOW VOLTAGE POWER SUPPLIES 5-2
MOTOR DRIVE ASSEMBLY 5-4

Chapter 1
INTRODUCTION

GENERAL INFORMATION

The 9866A Printer may be used to print characters which are input to the printer from a control device such as an -hp- 9800-Series calculator. The Model 66 Printer is capable of printing 80 characters (in a 5 x 7 dot matrix) on a single line at a rate of 240 lines per minute with a line density of six lines per inch. Table 1-1 is a complete listing of the Model 66 Printer Technical Specifications.

Table 1-1. Technical Specifications.

Printing Speed:	240 lines/minute
Print Density:	80 characters/line 6 lines/inch (2.4 lines/cm)
Character Set:	64 alphanumeric characters* (including space)
Character Font:	5 x 7 dot matrix
Data Input Format:	7 line ASCII code, bit-parallel, character-series fashion
Printer Paper:	8-3/4" wide thermal sensitive paper, available in 250' rolls
Size:	17-3/4" x 16" x 6-00 " (45.09 cm x 40.64 cm x 15.21 cm)
Weight:	45 lbs. (20.39 kg)
Power Requirements:	Nominal Voltage ranges: 100, 120, 220, 240V ac; +5% to -10% of each range Frequency range: 48 to 66 Hz Power: 250 voltamps, maximum
Temperature Range**:	0°C to 45°C
Humidity Range**:	95% relative humidity maximum (non-condensing)

*All characters are not available with some calculator systems.

**The printer paper is sensitive to high temperature and high humidity conditions.

Computer Museum

SCOPE OF THE MANUAL

This manual provides the information which is necessary for the installation, interfacing, or repair of a printer. Information describing printer operations when controlled by 9800-series calculators may be found in the Operating Manuals listed in Table 1-2. It is assumed that personnel servicing the printer are familiar with the necessary printer operating information for the calculator/printer system being serviced.

Table 1-2. Printer Control Operating Manuals

Calculator	Manual	Manual P/N	*Printer Control Section P/N
9810A	11264A Peripheral Control I	09810-90008	09810-90080
9810A	11252A Peripheral Control II	09810-90010	09810-90080
9820A	11220A Peripheral Control I	09820-90027	09820-90019
9820A	11224A Peripheral Control II	09820-90024	09820-90019
9830A	Operating & Programming	09830-90001	N/A

*This part number may be used to order Model 10 or Model 20 printer control operating sections.

SERVICE CONCEPT

Depending upon which printer assembly is defective, one of two methods should be used to service the printer. Procedure A applies to the electronic chassis components, the Low Voltage Power Supply (A3) assembly, and the Motor Drive (A5) assembly. Procedure B applies to the Input Logic (A1), Control Logic (A2), High Voltage Power Supply (A4), Row-data Storage (A6), Printhead (A7), and Heatsink assemblies.

PROCEDURE A

Detailed information describing the chassis, A3, and A5 electronic assemblies is provided to assist servicing personnel in the repair of these assemblies to a component level. These assemblies may be either repaired at the customer's location or exchanged with the corresponding

SERVICE CONCEPT (cont'd)

PROCEDURE A (cont'd)

11291A service kit assembly. The defective assembly may then be repaired at a convenient location or replaced with a new replacement assembly.

PROCEDURE B

All of the electronic assemblies except the chassis, A3, and A5 assemblies are on the HP Blue Stripe Exchange Program. When defective, these assemblies should be exchanged with the corresponding 11291A Service Kit assembly and the defective assembly returned to CSC or PCE for credit.

THE 9866A SERVICE KIT – 11291A

The 11291A Service Kit is available through CSC (PCE in Europe) to assist in the repair of defective printers. The Troubleshooting and Repair chapter of this manual provides information that allows the most effective use of the service kit. Table 1-3 lists the 9866A electronic assemblies which are provided in the service kit.

Table 1-3. The 11291A Service Kit Assemblies

Assembly		-hp- Part Number	Assembly
A1		09866-69501	Input Logic (Blue Stripe Program)
A2		09866-69502	Control Logic (Blue Stripe Program)
A3		09866-66503	Low Voltage Supply
A4		09866-69504	H.V. Supply (Blue Stripe Program)
A5		09866-66505	Motor Drive
A6		09866-69506	Row-Data Storage (Blue Stripe Program)
A7	(2)	09866-67908	Printhead (expense item)
A8		09866-60006	Heatsink Assembly (expense item)

Chapter 2
INSTALLATION

POWER REQUIREMENTS

Two line-voltage selector switches (see Figure 2-1) mounted on the rear panel of the printer will, when correctly positioned, permit the printer to be operated on a line voltage of either 100V, 120V, 220V, or 240V ac (+5%, -10%). The line frequency must be within a range of 48 to 66 Hz, inclusive. A maximum power of 250 voltamps is required for normal printer operation.

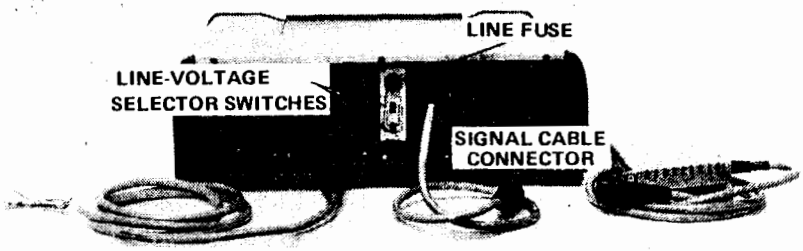

Figure 2-1. The Rear Panel

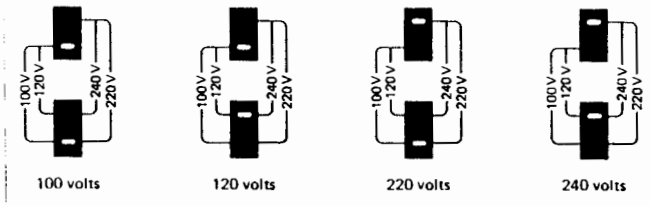

Figure 2-2. Switch Settings for the Various Nominal Powerline Voltages

CAUTION
A DIFFERENT FUSE IS REQUIRED AT EACH OF THE TWO VOLTAGE RANGES OF 100–120 VAC and 220–240 VAC. SEE "FUSES" FOR FURTHER INFORMATION.

FUSES

Table 2-1 shows the fuse that must be installed prior to connecting the printer to the ac power source.

FUSES (cont'd)

Table 2-1. Powerline Voltages and Fuses

NOMINAL VOLTAGE	OPERATING RANGE (-10%, +5% of nominal)	9866A FUSE
100 volts	90 to 105 volts	3-amp Slo-Blo
120 volts	108 to 126 volts	3-amp Slo-Blo
220 volts	198 to 231 volts	1.5-amp Slo-Blo
240 volts	216 to 252 volts	1.5-amp Slo-Blo

WARNING
BEFORE CHANGING A FUSE, ENSURE THAT THE PRINTER IS DISCONNECTED FROM ANY AC POWER SOURCE.

CAUTION
THE 9866A MAY BE DAMAGED IF THE INCORRECT FUSE IS INSTALLED.

GROUNDING REQUIREMENTS

To protect operating personnel, the National Electrical Manufacturers' Association (NEMA) recommends that the printer's cabinet be grounded. The printer is equipped with a three conductor power cable which, when connected to an appropriate power receptacle, grounds the cabinet of the printer.

CALCULATOR/PRINTER CONNECTIONS

AC POWER

The printer's ac power cord may be plugged into any unused calculator convenience power outlet or any convenient ac power outlet.

Computer Museum

CALCULATOR/PRINTER CONNECTIONS (cont'd)

AC POWER (cont'd)

> NOTE
> The printer uses 3 amps of current when operated on 100 or 120 Vac. Therefore, when the printer is connected to one of the calculator convenience outlets, the maximum current available for additional peripherals is limited to 3 amps during 100V or 120V operation.

PRINTER SIGNAL CABLE CONNECTIONS (OPT 10, OPT 20, or OPT 30 only)

When ac power has been properly applied to the printer, the Signal (i.e., I/O) cable may be connected to the cannon connector located on the rear panel of the printer. The cable is connected by aligning the keys in the cable's connector with the key slots in the printer's cannon connector. Then, while pushing the two connectors together, rotate the knurled barrel on the signal cable connector clockwise; thus drawing the two connectors together and locking them in place.

> NOTE
> The signal cable used to connect the printer and Model 30 Calculator uses a cannon connector on both ends. Either end of the cable may be connected to the printer.

If a Model 10 or Model 20 calculator is being used to drive the printer, then switch the calculator OFF and connect the remaining end of the signal (I/O) cable to any one of the unused calculator I/O slots.

> NOTE
> The Model 30 Calculator has a cannon connector located on the rear panel for printer connections. This connector should be used to attach the signal cable to the calculator using the same procedure described for the printer signal cable connections.

CALCULATOR/PRINTER CONNECTIONS (cont'd)

SETTING THE SELECT CODE (OPT 10 or OPT 20 only)

The select code (or address) of the peripheral device which is interfaced to the calculator through the interface kit, can be selected on the interface card. The recommended printer select code is 8.

The procedure given below should be used if a select code other than 8 is preferred.

1. Switch the calculator and the peripheral device OFF.
2. Disconnect the interface from the calculator. Remove the four screws located on the top of the card assembly; then, turn the card over and lift off the bottom cover.
3. Locate the Select Code Switch (see Figure 2-3). Raise the hinged cover on the switch. Using a small, flat-bladed screwdriver, carefully rotate the selector-tab until it is positioned at the desired select code number (numbers are printed on the side and on the top cover of the switch). Before closing the cover, be sure the slot in the selector-tab is positioned at a right angle with respect to the length of the switch.
4. Close the switch cover and replace the interface card bottom cover. Secure the cover with the four screws which were removed in step 2.
5. Place a Select Code Label on the peripheral device to indicate the new select code. A package of labels is supplied with the interface kit.
6. Reconnect the interface to the calculator, and turn the calculator and peripheral device ON. Verify that the desired select code is set by performing some peripheral control operations (or running a program) which specify the new code.

CALCULATOR/PRINTER CONNECTIONS (cont'd)

SETTING THE SELECT CODE (OPT 10 or OPT 20 only) [cont'd]

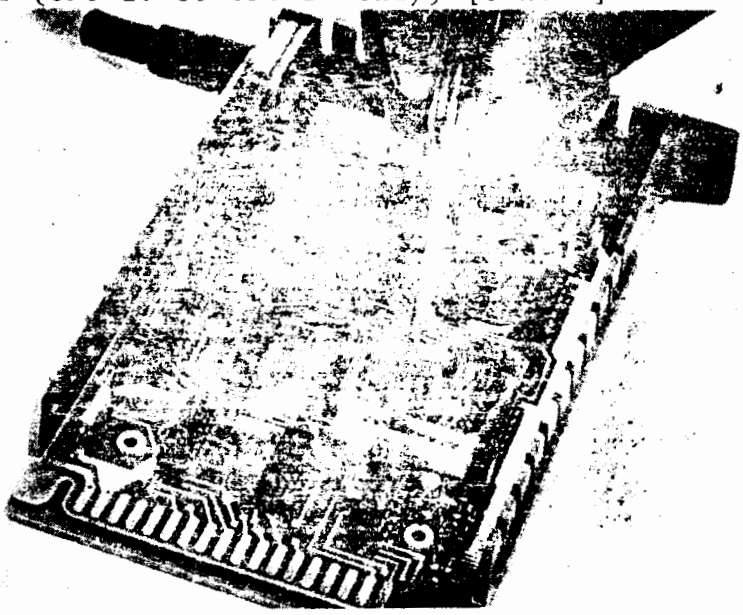

Figure 2-3. Setting the Select Code

9866A PRINTER INTERFACING

The 9866A Printer may be used as an eighty-character 'line printer' in many applications. The following presentation provides information describing signal timing and voltage requirements which must be met to properly interface the printer to an initiating device.

The printer requires signals which are negative true (i.e., ØV='low'= true; +5V='high'=false). The required voltage range of the low or ØV is ØV to +.8V; the required voltage range of a 'high' or +5V signal is +2V to +5.5V. The maximum amount of noise on a signal line must be within the specifications prescribed for TTL (Transistor-to-Transistor Logic) circuits.

Table 2-2 lists the signal which must be present on each of the interface cable wires; these signals are described in Figure 2-4. Table 2-3 provides a list of the -hp- ASCII characters which are in the printer vocabulary.

9866A PRINTER INTERFACING (cont'd)

Table 2-2. Printer Interface-Cable Wiring

Signal Mnemonic	Signal Name	Initiator	Function	Color	Printer Connector Part No.
GND	GROUND	COMMON	SYSTEM GROUND	BLACK	V
$\overline{DO\emptyset}$	DATA OUTPUT Ø	CONTROL DEVICE	CHARACTER BIT Ø	GREEN	F
$\overline{DO1}$	DATA OUTPUT 1	CONTROL DEVICE	CHARACTER BIT 1	BLUE	E
$\overline{DO2}$	DATA OUTPUT 2	CONTROL DEVICE	CHARACTER BIT 2	WHITE-RED	D
$\overline{DO3}$	DATA OUTPUT 3	CONTROL DEVICE	CHARACTER BIT 3	WHITE-BROWN	J
$\overline{DO4}$	DATA OUTPUT 4	CONTROL DEVICE	CHARACTER BIT 4	GRAY	K
$\overline{DO5}$	DATA OUTPUT 5	CONTROL DEVICE	CHARACTER BIT 5	VIOLET	L
$\overline{DO6}$	DATA OUTPUT 6	CONTROL DEVICE	CHARACTER BIT 6	RED	C
$\overline{OTP}$	OUT-OF-PAPER	PRINTER	PAPER STATUS	WHITE-BLACK	M
$\overline{CTL}$	CONTROL	CONTROL DEVICE	DATA READY	YELLOW	A
$\overline{FLG}$	FLAG	PRINTER	PRINTER BUSY	WHITE-ORANGE	H
$\overline{CLB}$	CLEAR LINE BUFFER	CONTROL DEVICE	CLEARS PRINTER	*ORANGE	G
		PRINTER	CABLE SHIELD GND	PINK	S

*Use of this wire is optional.

Computer Museum

9866A PRINTER INTERFACING (cont'd)

Table 2-3. Printer Character Binary and Octal Codes

CHARACTER	BINARY DO6543210	OCTAL EQUIV.	CHARACTER	BINARY DO6543210	OCTAL EQUIV.
@	1000000	100	@	1100000	140
A	1000001	101	A	1100001	141
B	1000010	102	B	1100010	142
C	1000011	103	C	1100011	143
D	1000100	104	D	1100100	144
E	1000101	105	E	1100101	145
F	1000110	106	F	1100110	146
G	1000111	107	G	1100111	147
H	1001000	110	H	1101000	150
I	1001001	111	I	1101001	151
J	1001010	112	J	1101010	152
K	1001011	113	K	1101011	153
L	1001100	114	L	1101100	154
M	1001101	115	M	1101101	155
N	1001110	116	N	1101110	156
O	1001111	117	O	1101111	157
P	1010000	120	P	1110000	160
Q	1010001	121	Q	1110001	161
R	1010010	122	R	1110010	162
S	1010011	123	S	1110011	163
T	1010100	124	T	1110100	164
U	1010101	125	U	1110101	165
V	1010110	126	V	1110110	166
W	1010111	127	W	1110111	167
X	1011000	130	X	1111000	170
Y	1011001	131	Y	1111001	171
Z	1011010	132	Z	1111010	172
[	1011011	133	[	1111011	173
\	1011100	134	\	1111100	174
]	1011101	135	]	1111101	175
↑	1011110	136	↑	1111110	176
← (minus)	1011111	137	!	0100001	041
SPACE	0100000	040	"	0100010	042
*	0101010	052	#	0100011	043
+	0101011	053	$	0100100	044
,(comma)	0101100	054	%	0100101	045
-	0101101	055	&	0100110	046
.	0101110	056	'(apost.)	0100111	047
/	0101111	057	(	0101000	050
0	0110000	060	)	0101001	051
1	0110001	061	:	0111010	072
2	0110010	062	;	0111011	073
3	0110011	063	<	0111100	074
4	0110100	064	=	0111101	075
5	0110101	065	>	0111110	076
6	0110110	066	?	0111111	077
7	0110111	067	LF (linefeed)	0001010	012
8	0111000	070			
9	0111001	071			

9866A PRINTER INTERFACING (cont'd)

Figure 2-4. 9866A Control Signals

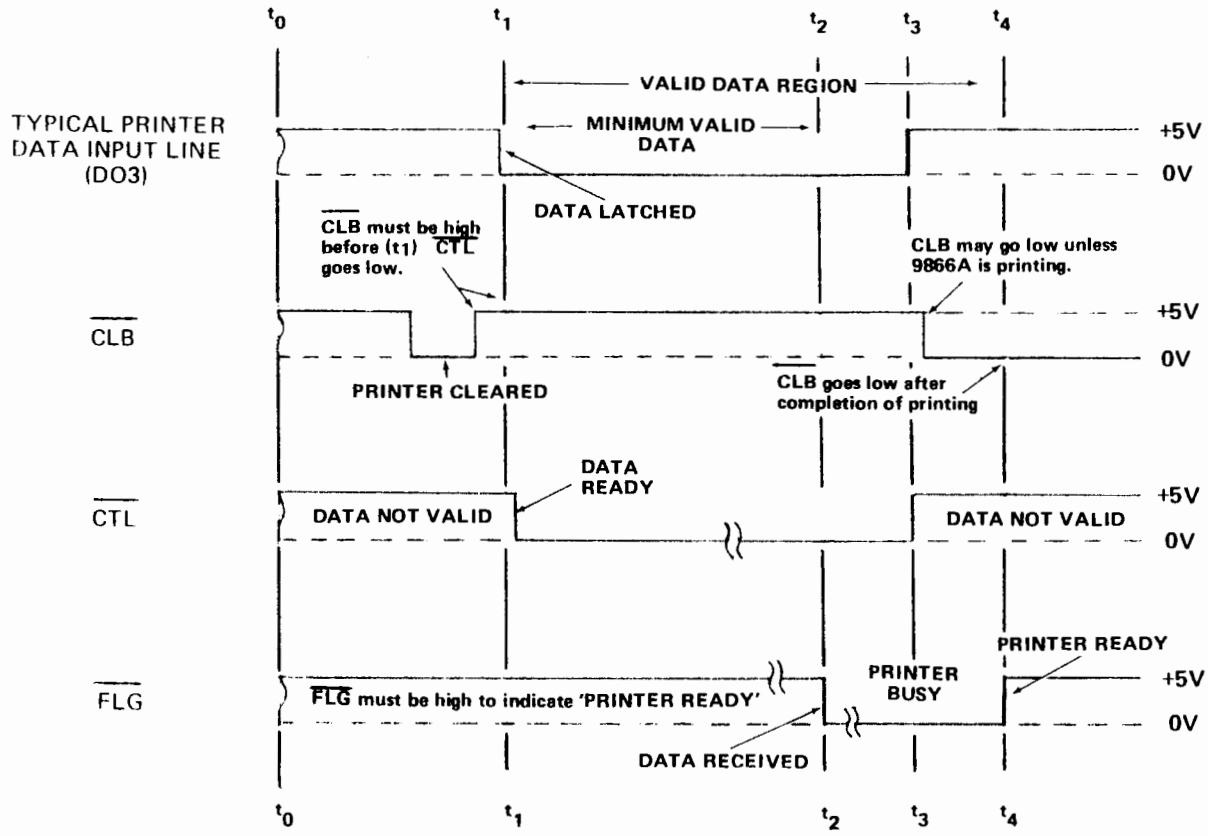

SIGNAL	REQUIREMENTS
1. DATA	Data must be valid from t_1 to t_2 Data may be valid until t_4 Data is latched at t_1
2. $\overline{CLB}$ (optional)	$\overline{CLB}$ must be false (high) before $\overline{CTL}$ (low) is given (t_1) $\overline{CLB}$ must remain false (high) until $\overline{CTL}$ goes high (t_3) $\overline{CLB}$ cannot clear printing process (t_4), but can otherwise clear all characters in printer if $\overline{FLG}$ is low.

9866A PRINTER INTERFACING (cont'd)

SIGNAL	REQUIREMENTS
3. $\overline{CTL}$	$\overline{CTL}$ must go low to indicate data ready (t_1+)
	$\overline{CTL}$ must remain low (true) until $\overline{FLG}$ goes low (t_2) ≥ 2us.
	$\overline{CTL}$ must return low to indicate new data ready
4. $\overline{FLG}$	$\overline{FLG}$ goes low (true) to indicate data received (t_2)
	$\overline{FLG}$ is high to indicate 'printer ready' ($t_\emptyset$ and t_4)
	$\overline{FLG}$ is low when printer is busy (5us to 250ms)

RECOMMENDED CIRCUITS

PRINTER OUTPUT CIRCUITS

Each output from the printer is driven by an open collector, inverting buffer/driver. The current sink of these drivers is 40mA and the breakdown voltage is +30V dc.

Vol @ (Iol = 16mA) = +Ø.4V maximum
Vol @ (Iol = 40mA) = +Ø.7V maximum
Voh (Open Collector) = 3ØV maximum
Iol = 4ØmA maximum
Ioh @ (Voh max.) = 250uA

Computer Museum

RECOMMENDED INTERFACE RECEIVING CIRCUIT

The preceding text describes the printer output signals. Since each printer output driver is an open collector, the receiving circuits of the interface must have a positive pull-up voltage (not to exceed +30V dc), and they must be restricted to less than 40mA printer-driver source current.

The circuit shown on the next page is a recommended interface receiving circuit.

RECOMMENDED CIRCUITS (cont'd)

Figure 2-5. Recommended Receiving Circuit

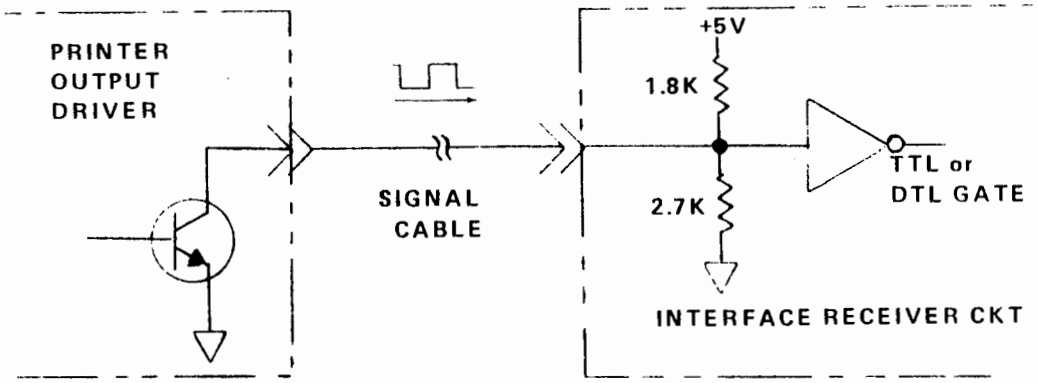

PRINTER INPUT CIRCUITS

The printer input signals, as described in the previous text, are negative true (i.e., ØV = low = true). Each input signal is received by series 74 TTL Integrated Circuit with a resistive divider on each input line. The resistive divider sets a bias of approximately +3V when the input cable is disconnected. The input voltage must not exceed +5.5V dc.

The figure below represents the recommended interface transmitting circuits.

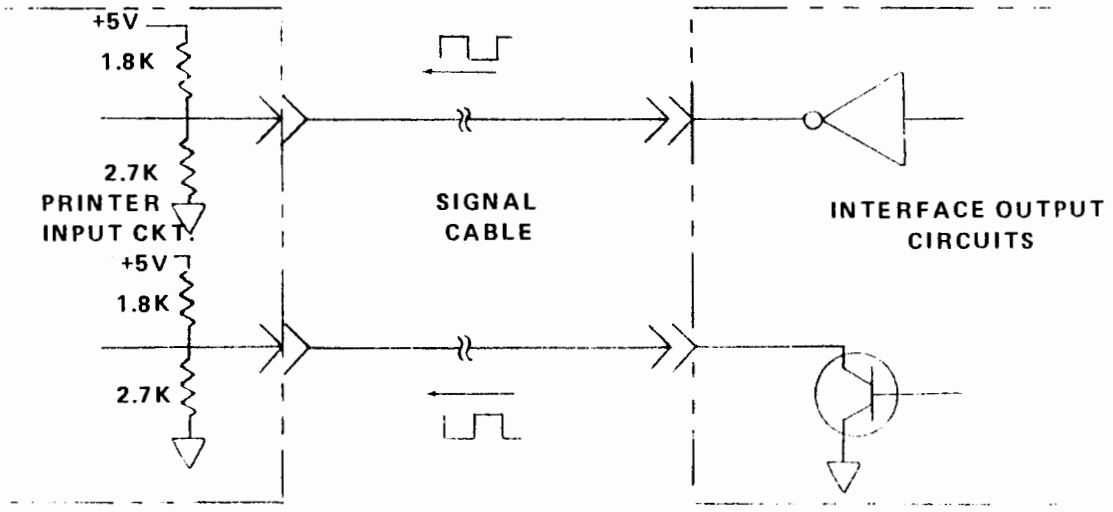

Figure 2-6. Recommended Transmitting Circuits

Table 2-4. Accessories Supplied with the Printer

DESCRIPTION	QUANTITY	-hp- Part No.
Peripheral Manual	2	09866-90000
Interface Cable*	1	09866-61606
Power Cord	1	8120-1378
Spare Fuses:		
1.5A, 250V, Slo-Blo	1	2110-0304
3.0A, 250V, Slo-Blo	2	2110-0381
Dust Cover	1	4040-0504
Printer Paper	2 rolls	9281-0414
Option 10 Accessories		
Printer Control Section	2	09810-90080
Printer Exerciser Program (consists of a pre-recorded program card and envelope)	1	09810-90081
Interface Cable	1	09866-61610
Select Code Labels	1	7120-2940
Option 20 Accessories		
Printer Control section	2	09820-90019
Supplement 'J' for the Model 20 Electrical Inspection Booklet	1	09820-90067
Interface Cable	1	09866-61620
Select Code Labels	1	7120-2940
Option 30 Accessories		
Interface Cable	1	09866-61630
Dust Cover	1	4040-0505
Power Cord, inter-instrument	1	8120-1575

* This item is not supplied with Options 10, 20, and 30.

Chapter 3
THEORY OF OPERATION

THE PRINTING PROCESS

The printer is capable of producing up to eighty characters on a single line by utilizing a thermal process that essentially 'burns' selected dots in a 5 x 7 dot matrix, onto heat-sensitive paper. The selected dots in each 5 x 7 matrix are printed one five-dot row at a time until all seven rows are printed; thus, each of the eighty characters is created.

To lower the printhead's current and cooling requirements, all eighty characters are not printed at the same time. Instead, the dots necessary to print every fourth character (i.e., 20 total characters) in each row are printed. This necessitates the printing of each row, in part, four times to complete that row for all eighty characters. This process applies for each of the seven rows.

The printheads which are activated for printing during the first pass on each row are designated as the group 1 printheads (one group-row); those activated during the second pass are group 2, and so on for the four groups of printheads (see Figure 3-1).

Computer Museum

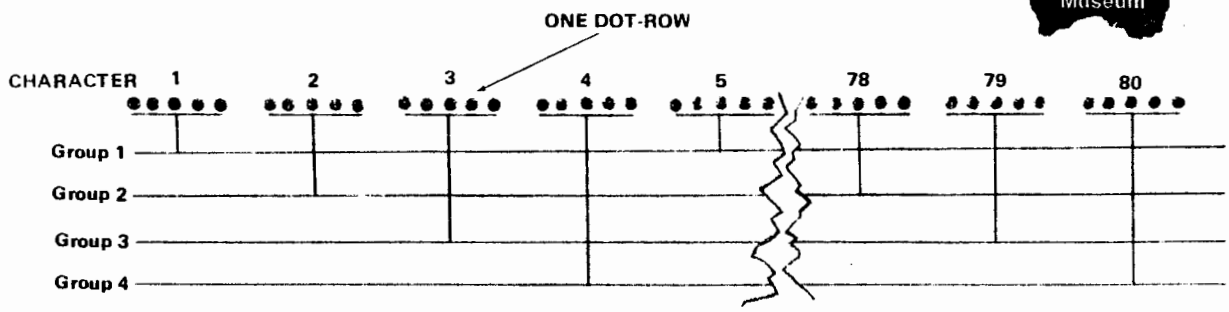

Figure 3-1. The Character Grouping

After completion of the seventh row, the paper is automatically advanced three rows, thus positioning the paper to allow a spacing of three rows between each print line.

GENERAL THEORY OF OPERATION

FLOWCHART EXPLANATION

Adjacent to each logical step on the flowchart (Figure 3-3) is one or more assembly designators (see Table 3-1). These assembly designators indicate the pc assembly on which the logic operations occur. The arrows ('→') between assembly designators indicate that the operation command originates on the assembly with the first designator and the result occurs on the assembly indicated by the following designators.

Table 3-1. Flowchart Assembly Designators

Assembly Designator	Assembly Number	Description
A1	09866-69501	Input Logic
A2	09866-69502	Control Logic
A5	09866-66505	Motor Drive
A6	09866-69506	Row Data Storage

The remainder of this presentation describes figure 3-3, a printer flowchart. The presentation is begun with a description of how printer characters are composed.

CHARACTER COMPOSITION

Refer to Figure 3-2 and the May issue of the H-P JOURNAL.

The input to the ASCII decoder is a 7-digit, ASCII-coded character from the calculator. The decoder translates the ASCII codes into 6-bit printer codes. (If the input code is not in the printer vocabulary, the input is ignored and a FLAG signal returned to the calculator.) The printer code is then loaded in a bit-parallel, character serial fashon into the 6 dynamic† registers - one serial bit per register - until each register contains eighty bits. If the calculator does not output 80 characters, the printer fills the remaining characters with spaces. The dynamic registers are always filled from the left to the right as shown in example 1.

†These regesters are 80-bit static MOS chips. The data in each register is recirculated during each print-mode shift operation, which is the reason for describing them as dynamic rather than static.

GENERAL THEORY OF OPERATION (cont'd)

CHARACTER COMPOSITION (cont'd)

Computer Museum

Figure 3-1A. Example 1.

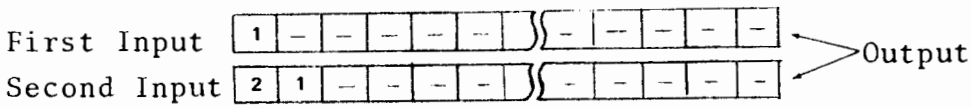

filling the dynamic registers

When data is not being input to the dynamic registers, the stored data may be output by shifting data through the register and 'sensing' the output bit (see Example 2). As the register shifts, the previously sensed bit loops back to the input and remains stored in the register. In this manner the data may be sensed as many times as necessary, and is not cleared until new data-inputting occurs.

Figure 3-1B. Example 2.

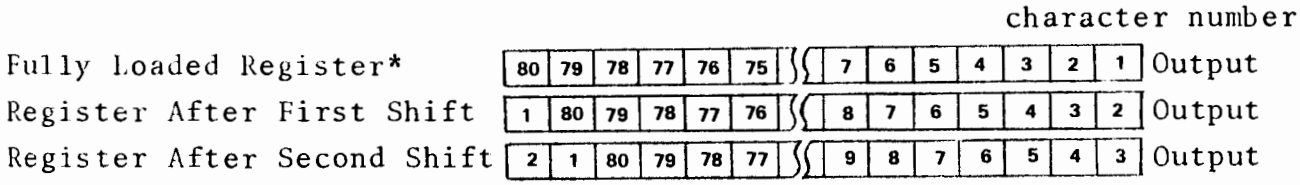

Shifting the register outputs

Since printhead requirements allow only one of every four adjacent characters to be printed at one time, the dynamic registers must be shifted until the appropriate character can be sensed. This is accomplished by shifting the register four additional times. The twenty characters are sensed, encoded into the dot-row pattern required for printing (by the ROM decoder), then one dot-row is stored in the dot-row storage registers. The dynamic registers are then shifted four additional times after which the printing of one group-row occurs (See Figure 3-1C.)

(continued on page 3-6.)

*Each register contains one of the 6-bits which comprise one character.

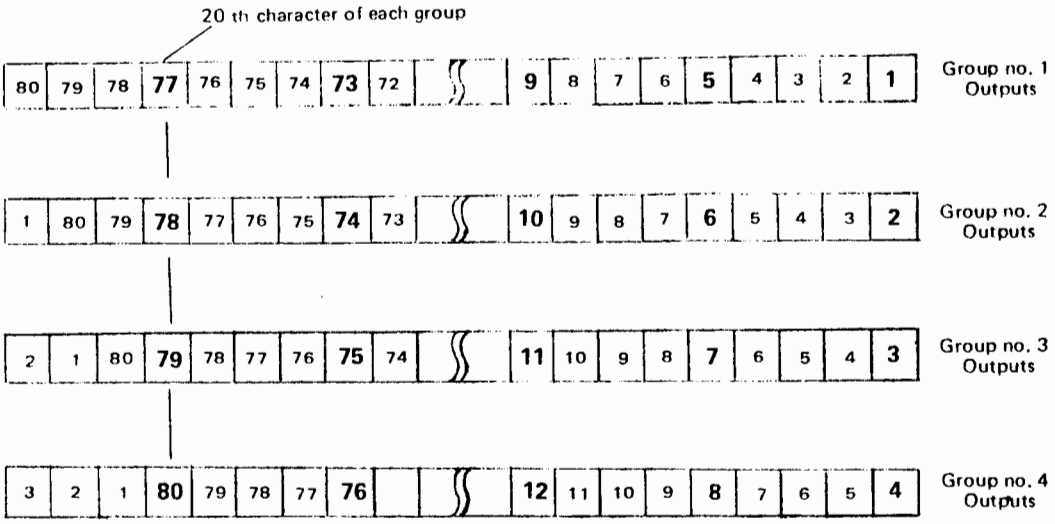

Figure 3-1C. The Group Outputs

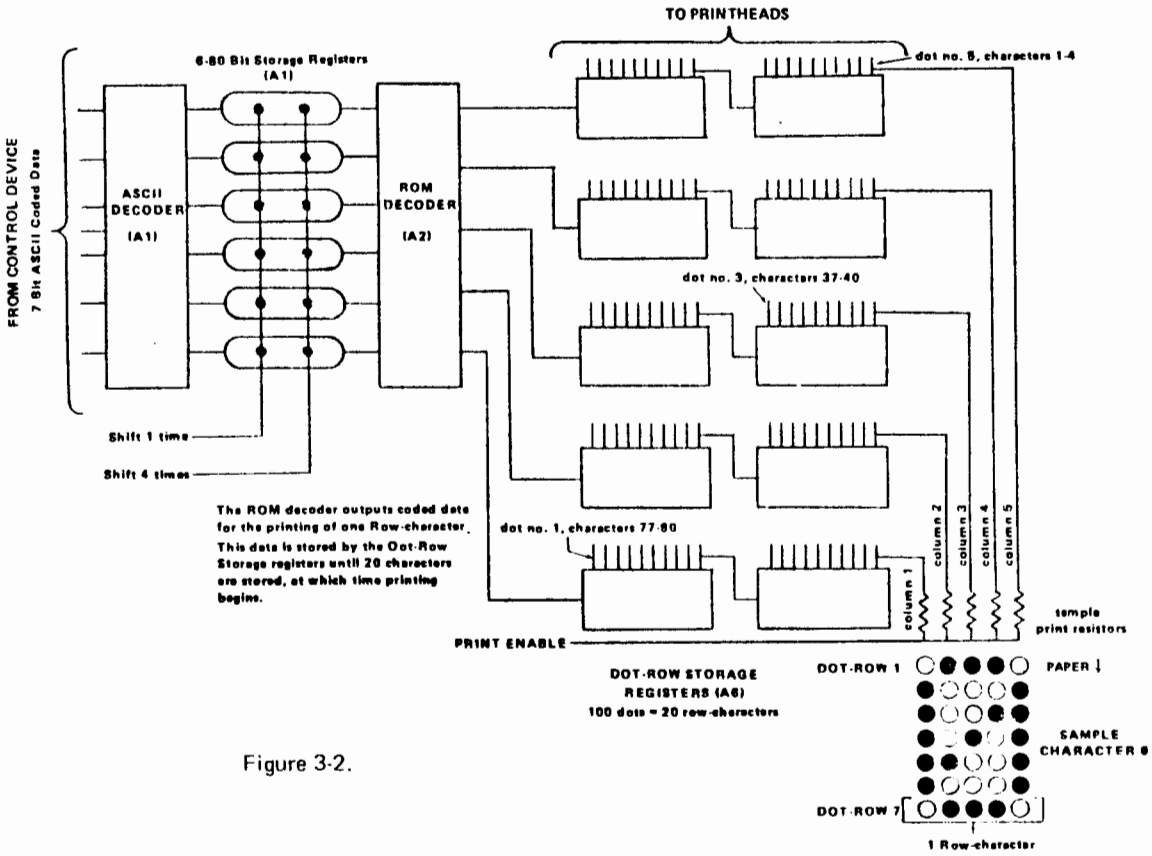

Figure 3-2.

GENERAL THEORY OF OPERATION (cont'd)

SEE PAGE 3-6
for a detailed flowchart
explanation.

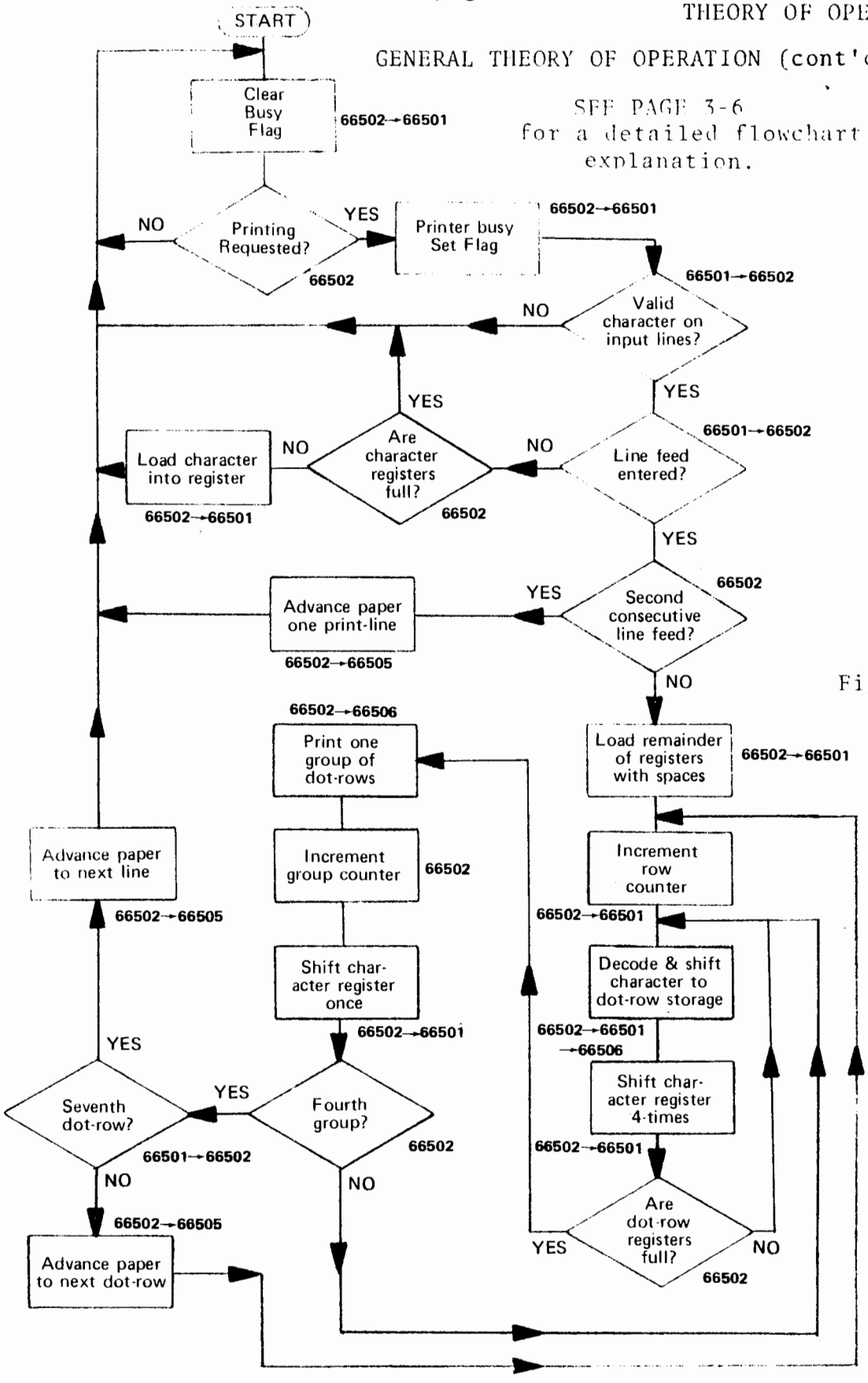

Figure 3-3.

GENERAL THEORY OF OPERATION (cont'd)

CHARACTER COMPOSITION (cont'd)

The dynamic registers are then shifted one more time to position them so that the first character in group two may be sensed. The group two characters are then processed in the same manner as group one.

When the first row of all four groups is printed, the data, in the dynamic registers, for group one is again accessed, encoded, stored and printed. The remaining five rows are printed in the same manner, which completes eighty characters with seven rows per character.

FLOW CHART EXPLANATION

Computer Museum

Operation	Description
Clear Busy Flag	The Flag Flip-Flop is cleared, thus allowing new data to be input from the calculator. This occurs following each data input unless printing is occurring.
Printer busy Set Flag	An ASCII character is on the input lines. The printer begins processing the new input and sets the Flag Flip-Flop. Thus, no new ASCII inputs can be entered.
Valid character on input lines?	The printer ensures that the requested (ASCII-coded) character is in its vocabulary (i.e., print set).
Line feed entered?!	The printer checks to see if the new (ASCII-coded) character is a linefeed. (One 'linefeed' causes the row-counter to increment and printing to occur. Two successive 'linefeeds' cause the paper to advance 10 rows or one print-line.)

FLOW CHART EXPLANATION (cont'd)

Operation	Description
	Before attempting to load the dynamic registers with another character, the registers are checked to see if 80 printable characters have been entered since the last line was printed. If the registers are full, the printer ignores all further character entries until a 'line-feed' causes the row-counter to increment and the line of 80 characters to be printed.
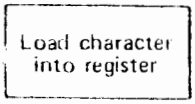	Since the dynamic registers do not contain 80 characters, the new (ASCII-coded) input character is loaded into the registers.
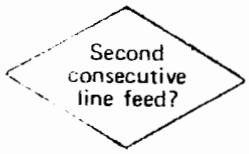	Two (or more) consecutive linefeeds result in the paper advancing one print line (10 rows).
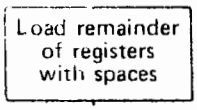	If the line to be printed contains fewer than 80 characters the empty characters are filled with blank spaces. (These spaces are right-justified.)
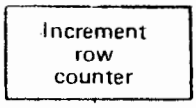	The paper is positioned for printing of the first row.
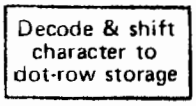	The 6 output bits (each character) of the dynamic shift registers are decoded by the ROM character decoder and output to the dot-row storage registers. The output of the ROM determines which dots in the (20) 5 x 7 matrix will be printed for each of the 20 (group) characters.

FLOW CHART EXPLANATION (cont'd)

Operation	Description
(cont'd)	The ROM outputs this information one group-row at a time, then increments to the second group. This process continues until all four groups (80 characters) have one row printed.
	When the dot-row registers are full, one group-row is ready for printing.
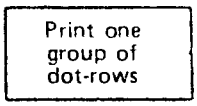	One group-row is printed.
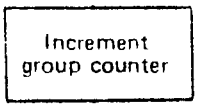	The group counter steps from group 1 through group 4. Thus, each group-row is successively printed.
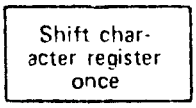	The first character of a following group is output to the ROM decoder.
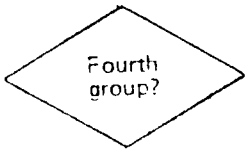	The group counter is checked to ensure that all four groups are printed. The counter is then reset for another row.
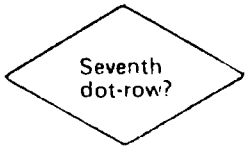	The seventh dot-row completes one line. After printing seven rows the paper is advanced three dot-rows.

Computer Museum

LOW VOLTAGE POWER SUPPLIES

+5V POWER SUPPLY

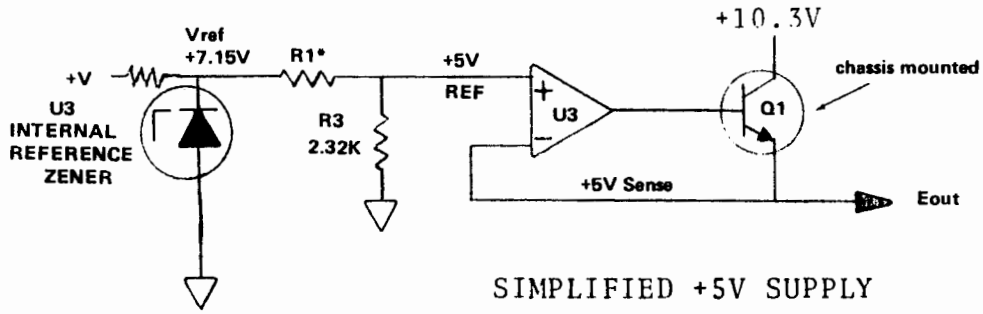

SIMPLIFIED +5V SUPPLY

Refer to the +5V Power Supply Schematic and the Simplified +5V Supply diagram (above) during the following presentation.

The +5V power supply regulator (U3) provides the correct amount of base drive-current for Q1 by comparing the reference voltage and +5V sense voltage. The reference voltage is provided by a temperature compensated reference zener that is contained in the regulator (U3). R1 and R3 reduce the +7.15V zener voltage to the +5V reference voltage. R1 must be changed to compensate for differences in the zener voltage when the regulator is changed.

The 'Series pass' transistor is chassis mounted to provide more adequate heat dissipation.

+5V POWER SUPPLY PROTECTION

Current limiting is provided by R10 and U4. R10 is in series with the +5V supply output; thus, the voltage across R10 is proportional to the 'series pass' transistor's (Q1) output current. U4 senses the voltage across R10 and switches the regulator OFF when the current output of Q1 becomes excessive.

Fuse F1 is a high speed fuse which protects 'downstream' devices should the series pass transistor become shorted.

LOW VOLTAGE POWER SUPPLIES (cont'd)

+5V POWER SUPPLY PROTECTION (cont'd)

Overvoltage protection is provided by CR10 and SCR Q2. When the supply output exceeds + 5V, CR12 fires Q2 which clamps the +5V output to ground. When ac power is switched OFF, Q4 is switched ON to shut down U3.

±12V POWER SUPPLIES

Power for the ±12V supplies is provided by two separate full-wave bridge rectifiers. The 12V supplies utilize self-contained regulators U1 and U2 to provide regulated ±12V outputs.

POWER ON PRESET (NPOP)

The Power On Preset (POP) circuit provides a low-true output to preset the printer logic when the printer is switched ON. The preset pulse is removed when the charge on C9 reaches the threshold of U5.

MOTOR DRIVE ASSEMBLY (A5)

The Motor Drive Assembly (A5) consists of four darlington amplifiers and their power supply. Each of the amplifiers is switched ON by a ØV input signal (on MDA1, MDA2, MDB1, or MDB2) from the Control Logic Assembly (A2). Two amplifier outputs are connected to each step motor winding; one amplifier provides positive drive-current and the other amplifier provides negative drive-current. (Only one amplifier per motor winding is activated at one time.) The two circuits containing Q1, Q3, Q5 and Q7 provide positive drive current; Q2, Q4, Q6, Q8, Q9, and Q10 provide negative drive current. CR1–CR4 protect the respective amplifiers from 'flyback current' when current through the winding is switched OFF.

EXAMPLE

When MDA1 is low, Q1 and Q5 are switched ON. (The Control Logic switched Q2 and Q6 OFF.) The positive current through the step motor winding (together with current through the second winding of the motor) causes

Computer Museum

MOTOR DRIVE ASSEMBLY (cont'd)

EXAMPLE (cont'd)

the motor to step (rotate) a preset amount and stop. The motor will remain at that position until the drive current to at least one of the motor windings is reversed.

POWER SUPPLY

Power for the amplifiers is provided by Z1, a full-wave bridge rectifier, which outputs ±17V dc.

Chapter 4
ASSEMBLY ACCESS

DISASSEMBLY

Disconnect the ac power cord and printer signal cable, then proceed as follows:

1. Most of the printer assemblies may be accessed by removing the three black screws which are located in the back of the top cover, then removing the top cover. The removal of the two PC board retainer plates allows the removal of any PC assembly which is contained in the upper portion of the instrument.

2. Access to the Row-data Storage (A6) and Mother board (AØ) assemblies may be obtained by placing the instrument on the back panel feet and removing the six screws in the bottom cover. Once the bottom cover is removed, the A6 assembly (7 screws) or AØ assembly (6 screws) may be removed following the removal of the associated screws. It may be necessary to loosen the three screws which hold the left, bottom foot to the chassis before the AØ assembly can be removed. If these three screws are loosened, they should not be tightened until the bottom cover is replaced and the 6 screws are tight. (This is necessary to provide proper alignment.)

3. The following procedure should be used to replace one or more printheads.
   A. Remove the top cover (see step 1).
   B. Loosen the two screws in the top-front and bottom-front of the instrument which attach the front panel to the chassis (see figures 4-2 and 4-4), and pull the front panel out and to the side of the instrument. This provides access to the printhead assembly.

CAUTION
CARE SHOULD BE TAKEN TO AVOID BREAKING THE CABLE WHICH CONNECTS THE FRONT PANEL AND THE MAIN FRAME.

DISASSEMBLY (cont'd)

3. (cont'd)

C. Remove the two screws in the bottom-front and top-front of the printhead assembly (see Figure 4-4. Then, lift the printhead assembly upward until the four printhead cables are extended. Use a small screwdriver (e.g., a #1010) to disconnect the four connectors from the A6 assembly. The screwdriver should be inserted into the slot in the front of each connector and gently turned until the connectors are forced apart.

D. Loosen the two load screws which are associated with the defective head. If the load screws are removed, take care not to lose the spring inside of each screw (see Figure 4-6).

E. Loosen the two associated #6 set screws (see Figure 4-4).

F. Remove the defective printhead out the bottom of the assembly.

CAUTION
THE PRINTHEADS MAY BE DAMAGED BY THE ABRASIVE ACTION OF THE HEAD AGAINST ANOTHER HEAD OR HARD OBJECT.

G. Use a brush to clean the reference edge (see Figure 4-1) of the heat sink assembly. Ensure that the reference edge is free from all dirt, grime, or metal burrs. If the reference edge cannot be properly cleaned, replace the heatsink assembly.

H. When the printhead(s) is being installed in the printhead assembly, care should be taken to ensure that the bottom edge of the head is flush with the reference edge.

I. Use the .004 inch spacer to adjust the spacing between each head. Always begin the spacing with one of the two center heads used as a reference and space the adjacent heads .004 inches from it. The remaining head should be spaced in relation to the head next to the reference head. Thus, the two outside heads are spaced last.

J. Check to ensure that all eight #6 allen screws are tight and that each head appears to be properly aligned.

Computer Museum

DISASSEMBLY (cont'd)

3. (cont'd)

J. (cont'd)

> CAUTION
> NEVER USE A ROUNDED #6 ALLEN WRENCH TO TIGHTEN THE PRINTHEAD ALLEN SCREWS.

K. Reinstall the printhead assembly by reversing steps C through F. Ensure that the printhead cables are not jammed between the chassis or the roller and the printhead assembly.

L. Perform the 'Printhead Alignment Procedure'.

M. If the printhead cannot be properly aligned, recheck steps G through K. If the problem cannot be corrected, use Figure 4-1., the 9866A Bucket Assembly exploded view, to replace the Heatsink Assembly (A8).

> CAUTION
> DO NOT DISASSEMBLE THE HEAT SINK ASSEMBLY.

PRINTHEAD ALIGNMENT PROCEDURE

1. Switch the printer line switch to the OFF position and remove the ac power cord.

2. Loosen the eight load screws (see Figure 4-4) approximately three turns.

PRINTHEAD ALIGNMENT PROCEDURE (cont'd)

3. Connect the ET to the connector on the top of the H.V. Power Supply assembly (A4), and turn the knob on the ET C-CW to the stop. This reduces the voltage on the print resistors as they may be damaged by normal printing currents during the alignment procedure. Connect the ac power cord to the printer and switch the printer ON. Then, connect the printer signal (I/O) cable.

4. Continuously print an 80-character line. If a 9800-Series calculator is being used, then the 9866A Exerciser may be used for a continuous printout by performing the following step after the 9866A Exerciser has been loaded into the calculator memory:

   9810A PRESS: GO TO LBL A SET FLG CONTINUE

   9820A PRESS: SET FLAG Ø RUN PROGRAM

   9830A PRESS: Ø for the number of times to perform the test.

5. While the printer is printing, turn the knob on the ET until printing is just visible. Then, adjust the two alignment cams (see Figure 4-1) for an optimum printout.

6. Tighten the eight load screws and check the printout. If three heads result in a satisfactory printout but the fourth head appears to be too light on one side, loosen the load screw on the dark side until the printout is even.

7. Turn the knob on the ET to the clockwise stop and again check the printout. If the printout is satisfactory, disconnect the ac power cord and reassemble the printer. Otherwise, repeat steps 5 through 7 until the printout is satisfactory.

PRINTHEAD ALIGNMENT PROCEDURE (cont'd)

8. If a satisfactory printout cannot be obtained, step M of the 'Assembly Access' procedure provides information for the replacement of the heat sink assembly.

Due to a higher yield process, a new print head assembly is being used for the 9866A. The new print head (part no. 09866-69910) is identified by a green ceramic backing plate. The current print head has a black backing plate. 9866A Printers with the new print head are identified by a serial number prefix of 1426A. Although electrically and mechanically identical, an inadjustable difference in print contrast exists between the two heads. Always replace print heads with the same type (same color code) of head.

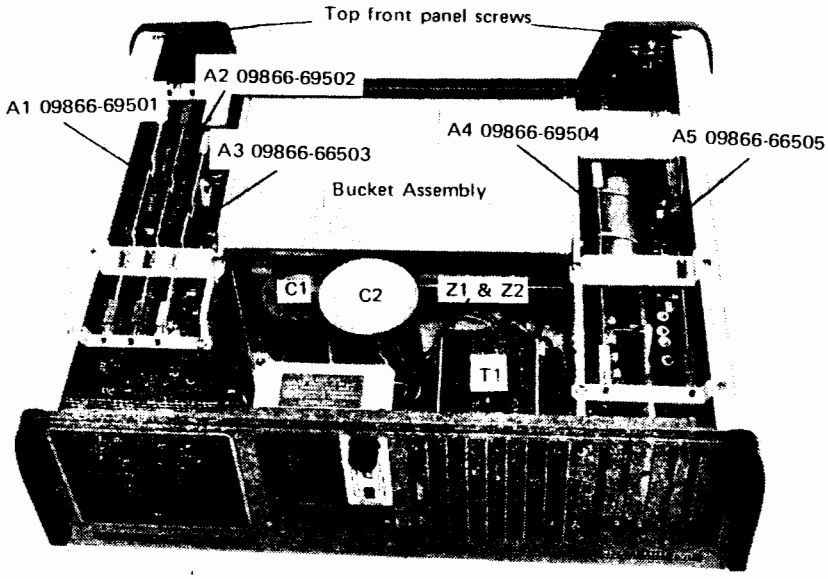

Figure 4-2. The Upper 9866A Assemblies

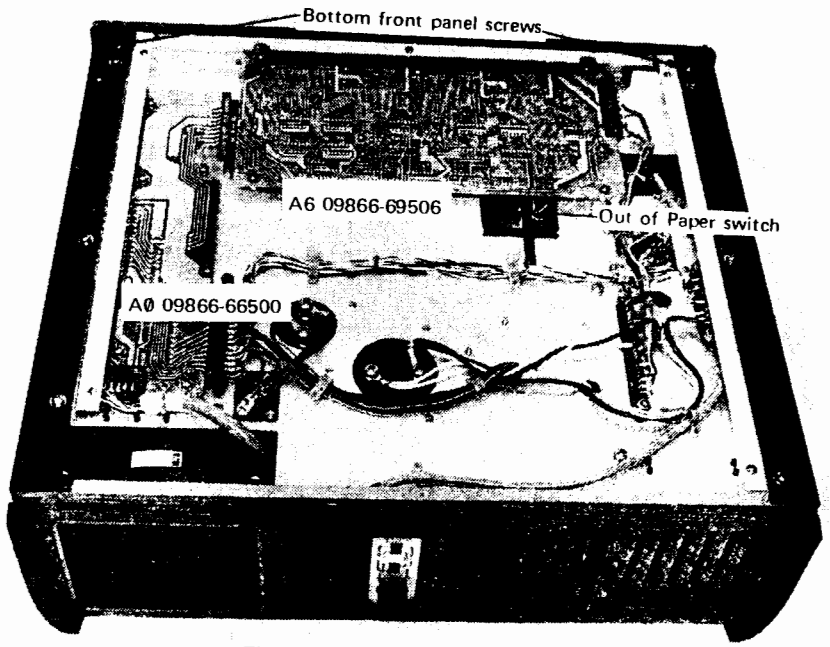

Figure 4-3. The Bottom Assemblies

Computer Museum

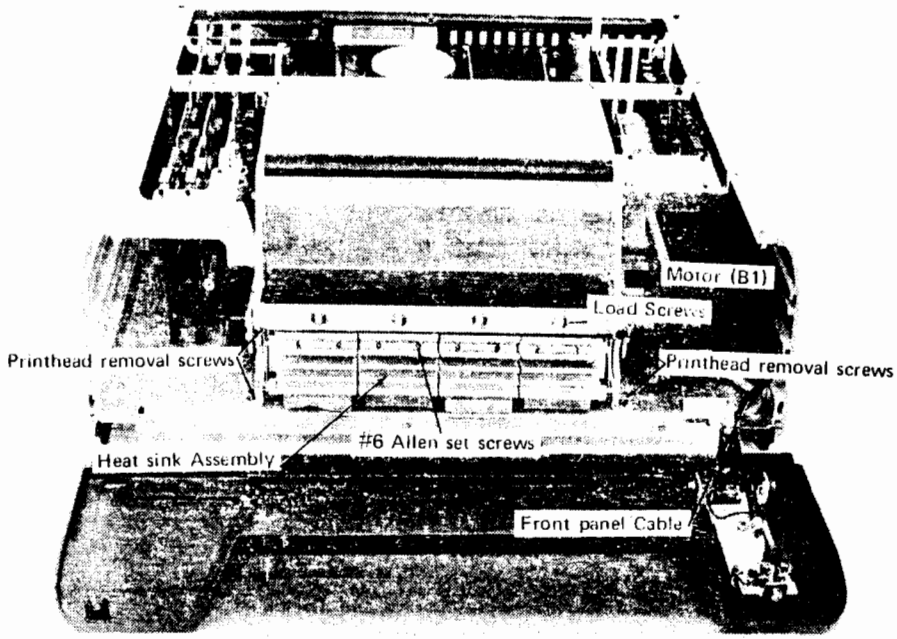

Figure 4-4. Removing the Front Panel

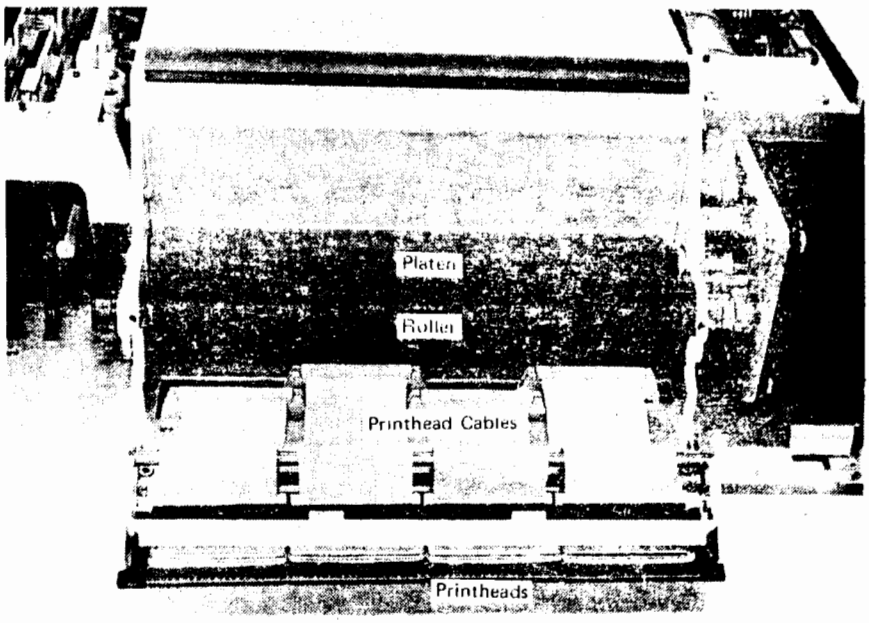

Figure 4-5. Printhead Assembly Removal

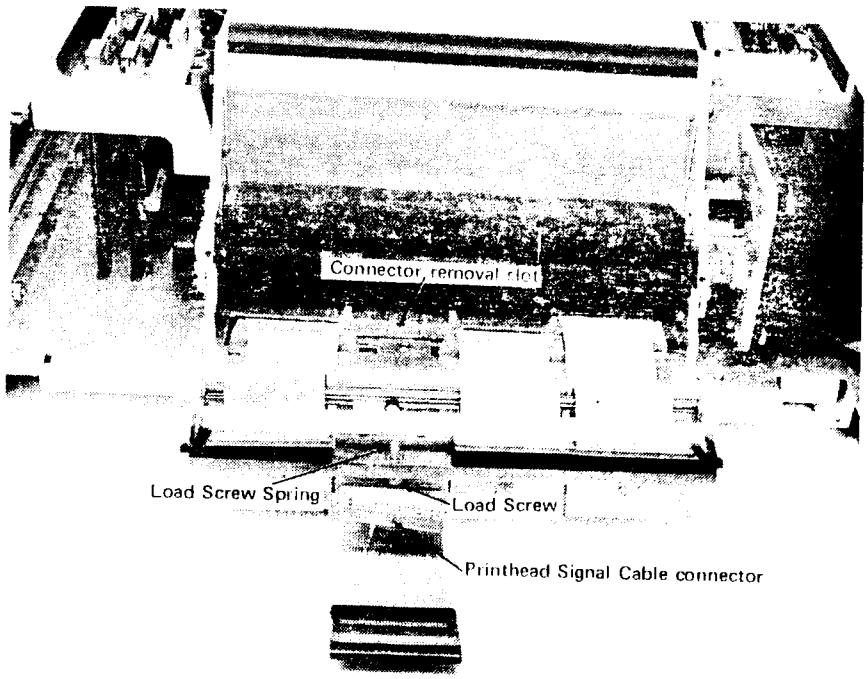

Figure 4-6. Printhead Removal

Chapter 5
TROUBLESHOOTING AND REPAIR

CHASSIS

WARNING

UNLESS OTHERWISE SPECIFIED, ALL AC POWER MUST BE REMOVED FROM THE 9866A FOR A MINIMUM OF 60 SECONDS PRIOR TO PERFORMING ANY TROUBLESHOOTING ON CHASSIS COMPONENTS. FAILURE TO OBSERVE THIS WARNING MAY RESULT IN ELECTRICAL SHOCK.

1. Disconnect the ac power cord and wait 60 seconds before proceeding with step number 2.

Computer Museum

2. Remove the printer top and bottom covers.

3. Visually inspect the chassis for foreign, conductive materials and loose or damaged components. Ensure that the case of Q1 and Q2 is not shorted to the chassis. Make all necessary repairs of any defects which are found during the visual inspection.

4. Remove the A3, A4, and A5 PC assemblies. Then, disconnect the connector to the mother board (XAØ). See Figure 4-3.

5. Use an -hp- 427A (or equivalent) to check Q1, Q2, and CR1. (Resistance reverse biased ≧ 10X Resistance forward biased.) These components may be easily accessed on the XAØ and XA4 connectors (see "Chassis Wiring Diagram" on pp. 5-18). Ensure that C1 & C2 aren't shorted.

6. Check the full-wave bridge rectifiers, Z1 and Z2, for shorted or open diodes.

7. The power transformer, T1, may be checked by measuring the voltage on each secondary winding. Table 5-1 lists the ac voltage output of each winding. The ac power must be connected and the line switch in the ON position to perform this step.

CHASSIS (cont'd)

7. (cont'd)

WARNING
PRECAUTIONS MUST BE TAKEN NOT TO COME IN CONTACT WITH PRIMARY (AC) POWER WHEN CHECKING THE POWER TRANSFORMER OUTPUTS.

CAUTION
ALLOW AT LEAST 60 SECONDS FOR C1 AND C2 TO DISCHARGE BEFORE REINSTALLING ANY OF THE PC ASSEMBLIES.

Table 5-1. Open Circuit Secondary Voltages

TRANSFORMER OUTPUT	VOLTAGE (rms)
Blu-Blu	18.2V ac
Orn-Orn	18.2V ac
Grn-Grn	09.6V ac
Gry-Gry	38.0V ac
Yel-Yel	27.7V ac
Yel-Brn	13.8Vac
Voltage across C1	9.6V dc
Voltage across C2	52V dc

LOW VOLTAGE POWER SUPPLIES (A3)

NOTE
The following procedures assume that the replacement of a 9866A assembly with the associated service kit assembly corrects the failure.

LOW VOLTAGE POWER SUPPLIES (A3) (cont'd)

Before troubleshooting the A3 assembly, remove the PC board and visually inspect the board for damaged components or foreign, conductive materials. If any defects are found, they should be corrected before proceeding with the procedure.

±12V POWER SUPPLIES

Measure the +12V power supply outputs. If either of the supply outputs is not in the required specification (12 ± 5%), check the output of the full-wave bridge rectifier for 22.0V (±10%). If the full-wave bridge output does not meet the required voltage specifications, repair the bridge. If the full-wave bridge voltage output is satisfactory, replace the associated regulator IC (U1 or U2).

5V POWER SUPPLY

To troubleshoot the +5V power supply, perform the following procedure.

1. Check A3Q1. Replace A3Q1 if it is suspected of being defective.

2. Check, and replace if defective: F1, CR12, and Q2.

3. Replace the voltage regulator, U3. It may be necessary to change R1* to bring the power supply output within the required voltage specifications. To select the proper value for R1, substitute a 2K ohm pot for R1. Adjust the pot for the correct power supply output, then, measure the resistance to which the pot is adjusted and use Table 5-2 to select the nearest resistor value to the resistance measured across the pot.

4. If the power supply is still defective, replace U4.

Computer Museum

Table 5-2. R1 Padding List

Description	Part No.
R-F 1240 OHM .01	0698-3223
R-F 866 OHM .01	0698-3495
R-F 1180 OHM .01	0698-3512
R-F 806 OHM .01	0698-3557
R-F 787 OHM .01	0698-4014
R-F 953 OHM .01	0698-4125
R-F 1020 OHM .01	0698-4195
R-F 1070 OHM .01	0698-4196
R-F 1270 OHM .01	0698-4422
R-F 768 OHM .01	0698-4462
R-F 845 OHM .01	0698-4463
R-F 887 OHM .01	0698-4464
R-F 931 OHM .01	0698-4465
R-F 976 OHM .01	0698-4466
R-F 1050 OHM .01	0698-4467
R-F 1130 OHM .01	0698-4468
R-F 1150 OHM .01	0698-4469
R-F 1210 OHM .01	0757-0274
R-F 1000 OHM .01	0757-0280
R-F 750 OHM .01	0757-0420
R-F 825 OHM .01	0757-0421
R-F 909 OHM .01	0757-0422
R-F 1100 OHM .01	0757-0424

LOW VOLTAGE POWER SUPPLIES (A3) (cont'd)

POWER ON PRESET CIRCUIT (POP)

1. Check CR8, 10, 13, 14, 15, &17, and replace if found defective.

2. Check C8, C9, and C10 for shorts.

3. Replace U5.

MOTOR DRIVE ASSEMBLY (A5)

The following procedure assumes that the printer operates correctly when the 9866A A5 assembly is replaced with the appropriate 11291A kit assembly.

Visually inspect the A5 assembly for foreign, conductive material and loose or damaged components. If any defects are found, perform any repairs that are necessary.

The following procedure should assist you in the location of defective A5 assembly components.

1. Install the defective A5 assembly into the 9866A and switch the LINE switch ON.

2. Check for ±17V dc output from Z1 (to ground).

3. Use an -hp- 427A voltmeter (or equivalent) to measure the dc voltage on the collectors of the large, heat sunk transistors (Q1 - Q4) while holding 'PAPER ADVANCE' pressed.

Result:	Button Pressed	Button Released
Q1 and Q3	+2.5V dc ±10%	(+17V or -6V dc)
Q2 and Q4	-2.5V dc ±10%	(-17V or +6V dc)

MOTOR DRIVE ASSEMBLY (A5) (cont'd)

4. If any of the voltages are incorrect, repair the associated amplifier. The two transistors in each darlington pair should be replaced together; the 'flyback' diodes CR1 through CR4 should be checked while the associated driver is removed.

5. If any doubt exsists as to proper amplifier operation, an -hp- 180A oscilloscope (or equivalent) may be used to observe the waveform on the collector of Q1 through Q4 (shown below) while holding 'PAPER ADVANCE' pressed.

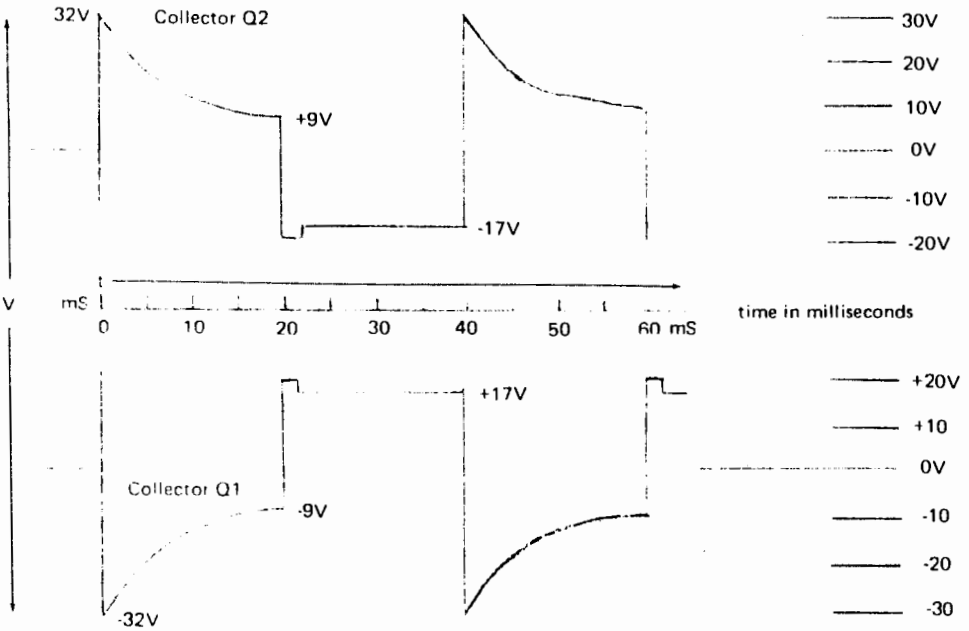

Figure 5-1. Motor Drive Waveform

6. If all four amplifiers are inoperative, either Z1, C1, or C2 is defective.

NOTE

The value of resistors A5R1-R4 has been changed from 15 ohms to 10 ohms to increase the torque developed by the motor. This change required that the wattage of those resistors also be changed from 10W to 20W.

REFERENCE DESIGNATOR	hp PART NO.	TQ	DESCRIPTION	MFR.	MFR. PART NO.
			11291A SERVICE KIT		
A1	09866-69501	1	Input Logic Ass'y		
A2	09866-69502	1	Control Logic Ass'y		
A3	09866-66503	1	Low Voltage Power Supply		
A4	09866-69504	1	High Voltage Power Supply		
A5	09866-66505	1	Motor Drive Ass'y		
A6	09866-69506	1	Row-data Storage Ass'y		
A7	09866-67908	2	Print Head Ass'y		
A8	09866-60006	1	Heat Sink Ass'y		
	09866-90030	2	Service Manual		
	1853-0340	2	Transistor, pwr		
	1854-0458	2	Transistor, pwr		
	1901-0684	2	Diode, rect		
	2110-0381	2	Fuse, 3A SB		
	2110-0304	2	Fuse, 1.5A SB		
	2110-0454	5	Fuse, Ceramic 7A, for A3 bd.		
	2140-0248	2	Lamp, Incandescent		
	9281-0414	1	Paper, Thermal		
	9320-1644	4	Failure Report		
	09866-20001	1	Wrench, shaved, 3/8"		
	8710-0864	2	#6 Allen Wrench		
	09866-60001	1	Head Driver ET		
	09866-20001	1	.004" Spacer , Head Alignment		
	2110-0456	1	Fuse 10A, Ceramic - for A4 bd		

Computer Museum

REFERENCE DESIGNATOR		hp PART NO.	TQ	DESCRIPTION		
A3		09866-66503	1	LOW VOLTAGE POWER SUPPLY		
	C1, C2	0180-2561	2	C-F: 250UF		
	C3, C4	0180-1746	3	C-F: 15UF, 20V		
	C5	0160-3456	1	C-F: 1000PF, 1kv		
	C6	0150-0093	1	C-F: .01UF, 100V		
	C7	0180-0104	3	C-F: 200UF, 15V		
	C8	0180-0197	1	C-F: 2.2UF, 35V		
	C9	0180-1746		C-F: 15UF, 20V		
	C10, C11	0180-0104		C-F: 200UF, 15V		
	CR1 — CR10	1901-0045	12	Diode: Si, .75A, 100V		
	CR11	1901-0040	3	Diode: Si, .05A, 30V		
	CR12	1902-3104	1	Diode: Bkdn, 5.62V		
	CR13	1902-0041	1	Diode: Si, 5.11V		
	CR14	1901-0045		Diode: Si, .75A, 100V		
	CR15	1902-0049	1	Diode: Bkdn, 6.19V		
	CR16	1901-0040		Diode: Si, .05A, 30V		
	CR17	1901-0045		Diode: Si, .75A, 100V		
	F1	2110-0454	1	Fuse: Ceramic		
	Q1	1853-0052	1	XSTR: 2N3740		
	Q2	1884-0082	1	Thyristor		
	Q3	1854-0019	1	XSTR: Si, NPN		
	Q4, Q5	1854-0071	2	XSTR: Si, NPN		
	R*1	See Table 5-2	1	R-F: Padded value		
	R3	0698-4434	1	R-F: 2320 OHM, .01		
	R4	0684-2221	1	R-F: 2200 OHM, .1		
	R5	0698-0084	1	R-F: 2150 OHM, .01		
	R6	0684-1011	2	R-F: 100 OHM, .1		
	R7	0687-1001	1	R-F: 10 OHM, .1		
	R8	0684-1031	1	R-F: 10K, .1, 1/4W		
	R9	0698-3442	1	R-F: 237 OHM, .01		
	R10	0811-1827	1	R-F: .1 OHM, 3W, .1		
	R11	0684-1021	1	R-F: 1000 OHM, .1		
	R12	0684-1011		R-F: 100 OHM, .1		
	R13	0687-1021	1	R-F: 1000 OHM, .1		
	R14, R20	0757-0274	2	R-F: 1021 OHM, .01		
	R15	0684-4721	2	R-F: 4700 OHM, .10		
	R16	0684-3931	1	R-F: 39K, .1, 1/4W		
	R17	0684-5621	1	R-F: 5600 OHM, .1		
	R18	0684-4711	1	R-F: 470 OHM, .1		
	R19	0684-1511	1	R-F: 150 OHM, .1		
	R22	0684-4721		R-F: 4700 OHM, .10		
	R2	0684-4731	1	R-F: 47K, .1		
	U1, U2	1826-0117	2	Linear IC		
	U3	1820-0196	1	IC: U5R7723393		

REFERENCE DESIGNATOR		-hp- PART NO.	TQ	DESCRIPTION		
A3		09866-66503		LOW VOLTAGE POWER SUPPLY(cont'd)		
	U4	1820-0203	1	IC: Opr Ampl		
	U5	1820-0583	1	IC: DM74LOO		
		0403-0213	2	Extr: PC Bd, Orn		
		09866-26503	1	PC BD: Lvps		
A5		09866-66505	1	MOTOR DRIVE ASSEMBLY		
	C1, C2	0180-2082	2	C-F: 4000UF, 25V		
	CR1 — CR4	1901-0045	4	Diode: Si, .75A, 100V		
	Q1	1853-0052	2	XSTR: 2N3740		
	Q2	1854-0072	2	XSTR: 2N3054		
	Q3	1853-0052		XSTR: 2N3740		
	Q4	1854-0072		XSTR: 2N3054		
	Q5	1853-0281	4	XSTR: 2N2907A		
	Q6	1854-0527	2	XSTR: 2N2895		
	Q7	1853-0281		XSTR: 2N2907A		
	Q8	1854-0527		XSTR: 2N2895		
	Q9, Q10	1853-0281		XSTR: 2N2907A		
	R1 — R4	0811-1655	4	R-F: 10 OHM, .05 20W		
	R5	0684-1011	4	R-F: 100 OHM, .1		
	R6	0684-1021	4	R-F: 1000 OHM, .1		
	R7	0684-1011		R-F: 100 OHM, .1		
	R8	0684-1021		R-F: 1000 OHM, .1		
	R9	0684-1011		R-F: 100 OHM, .1		
	R10	0684-1021		R-F: 1000 OHM, .1		
	R11	0684-1011		R-F: 100 OHM, .1		
	R12	0684-1021		R-F: 1000 OHM, .1		
	R13	0687-1521	2	R-F: 1500 OHM, .1		
	R14	0687-3321	2	R-F: 3.3K, .10		
	R15	0687-1521		R-F: 1500 OHM, .1		
	R16	0687-3321		R-F: 3.3K, .10		
	R17	0684-2221	2	R-F: 2200 OHM, .1		
	R18	0684-1231	2	R-F: 12K, .1, 1/4W		
	R19	0684-2221		R-F: 2200 OHM, .1		
	R20	0684-1231		R-F: 12K, .1, 1/4W		
	Z1	1901-0638	1	Diode Ass'y: Si, 200V		
		0403-0215	2	Extr: PC Bd, Grn		
		09865-26505	1	PC BD: Motor Drive		

REFERENCE DESIGNATOR	-hp- PART NO.	TQ	DESCRIPTION
	09866-67907	1	PANEL, REAR ASSEMBLY
	09101-04601	1	Screen-Filter
	09866-22001	1	Casting-Rear
	09866-60301	1	Plate-Outer Ass'y
	09866-60408	1	Connector Rear Ass'y
	09866-61601	1	Cable I/O Ass'y
	09866-61602	1	Cable Power Ass'y
	1400-0084	1	Holder Fuse
	2110-0003	1	Fuse: 3A NB
	3150-0223	1	Filter-Foam
	3160-0262	1	Fan-Tube Axial
	5040-5833	1	Shroud-Fan
	9100-3295	1	XFMR Power
	09866-67904	1	CHASSIS, MAIN ASS'Y
C1	0180-2560	1	C-F: 18000UF
C2	0180-2559	1	C-F: 10000UF
CR1	1901-0684	1	Diode: Si 100V
Q1	1854-0458	1	XSTR
Q2	1853-0340	1	XSTR
R1	0698-3620	1	R-F: 100 OHM, 2W
R2	0764-0003	1	R-F: 3.3K, .05, 2W
Z1	1901-0161	1	Diode: Si, 100V
Z2	1906-0008	1	Rect
	09820-27902	10	Stud-Side Panel
	09866-00101	1	Deck Main
	09866-00501	1	Angle RH
	09866-00502	1	Angle LH
	09866-23201	2	Mount
	09866-24102	1	Cover Side LH
	09866-24103	1	Cover Side RH
	09866-61603	1	Cable Ass'y Main
	09866-66500	1	PC Ass'y, Mother Board
	09866-66503	1	PC Ass'y, Low Voltage
	09866-69504	1	PC Ass'y, PNT Sup
	09866-67907	1	Panel Rear Ass'y
	1200-0043	2	Insul-XSTR: Mtg
	1200-0080	2	Insulator-Diode
	3101-1802	1	SW Ass'y

Computer Museum

REFERENCE DESIGNATOR	-hp- PART NO.	TQ	DESCRIPTION		
	09866-67904		CHASSIS, MAIN ASS'Y (cont'd)		
	5040-5831	1	Foot: LT Rear		
	5040-5832	1	Foot: RT Rear		
8	5040-7037	2	Foot #3-4		
	09810-90080	2	Printer Control Section (9810A)		
	09810-90081	1	Printer Exerciser		
	09820-90019	2	Printer Control Section (9820A)		
	09820-90067	1	Supplement J		
	09866-01201	1	Strap-Heat Sink		
	09866-01208	2	Brkt Tear		
	09866-01209	1	Brkt RHF		
	09866-01211	1	Brkt RHC		
	09866-01212	1	Brkt LHC		
	09866-01213	1	Brkt RHR		
	09866-01214	1	Brkt LHR		
	09866-01215	1	Brkt LHF		
	09866-04101	1	Cover Btm		
	09866-04102	1	Cover Top		
	09866-04308	1	Plt Head LH		
	09866-04309	1	Plt Head RH		
	09866-06801	1	Guide Paper Hd		
	09866-08601	2	Arm Pivot		
	09866-21102	1	Heat Sink RH		
	09866-21103	1	Heat Sink LH		
	09866-21104	2	Heat Sink CEN		
	09866-21201	1	Bar Load		
	09866-22301	8	Holder Sprg		
	09866-23701	1	Pivot Rod		
	09866-24709	1	Spacer RHF		
	09866-24710	1	Spacer LHF		
	09866-61606		Cable-External		
	09866-61610	1	Cable Ass'y: 9810A		
	09866-61620	1	Cable Ass'y: 9820A		
	09866-61630	1	Cable Ass'y: 9830A		
	09866-69501	1	PC Ass'y: Input Logic		
	09866-69502	1	PC Ass'y: Control Logic		
	09866-66505	1	PC Ass'y: Motor Drive		
	09866-69506	1	PC Ass'y: Row Data		
	09866-67903	1	Bucket Ass'y		
	09866-67904	1	Chassis Main Ass'y		
	09866-67908	4	Head Ass'y		
	09866-90000	2	**Peripheral Manual**		
	09866-90030	1	Service Manual		
	0370-2471	1	Key-Rect, Paper		
	1460-1367	8	Spring-Cprsn		
	1500-0306	2	Cam-Adjusting		

REFERENCE DESIGNATOR	-hp- PART NO.	TQ	DESCRIPTION
	09866-67904		CHASSIS, MAIN ASS'Y (cont'd)
	1600-0347	1	Brkt LHR
	2110-0304	1	Fuse: 1.5A, SB
	2190-0142	2	Washer-Flat
	3030-0353	8	Set Screw
	4040-0504	1	Dust Cover
	4040-0505	1	Dust Cover (9830A)
	4040-0944	1	Panel-Front
	5040-7044	10	PC Guide
	7120-2785	1	Plate-Patent
	7120-2988	1	NPL-Front
	7120-3027	1	Label-Paper Load
	7120-3185	1	Label-Caution
	7120-3315	1	Plate-Serial
	8120-1378	1	Cable-AC Power
	8120-1575	1	Ass'y Cable
	9211-1694	1	Ctn- Self Locking (9810A-9820A)
	9281-0414	1	Paper-Thermal
	3101-1784	1	switch, ON-OFF
	3101-1609	1	switch, line voltage
	3101-1767	1	switch, 'paper advance'

Computer Museum

EXPLODED VIEW PARTS LIST

REF. NO.	DESCRIPTION	P/N	TQ
1	Motor - Connector Ass'y	09866-60005	1
	Tie-Wrap	1400-0249	
2	Screw, #10 Pozidrive	2680-0103	4
3	Washer, #10 Splitlock	2190-0034	4
4	Screw, #8 x 3/4" pozidrive	2510-0111	4
5	Washer, #8 Splitlock	2190-0073	4
	Washer, #8 Flat	3050-0071	4
6	Block, Motor Mount	5040-7404	1
7, 41	pivot, link	09866-27001	2
8, 40	Link-bearing Ass'y	09866-60004	2
9, 37	Screw, #8 pozidrive	2510-0107	8
38	Washer, #8 Splitlock	2190-0073	
10	Plate, Side (RH)	1530-1719	
11, 33	Cone - bearing Ass'y	09866-60002	2
12, 32	Spacer	09866-04701	2
13, 35	Washer, #6 Splitlock	2190-0918	2
14, 34	Screw, #6 Pozidrive	2360-0201	2
15	Bucket, Front	09866-26803	1
16	Bucket, Bottom	09866-26801	1
17	Switch, Out of Paper	09866-26801	1
18	Screw, #4 x 1/4" Pozidrive	2200-0139	2
	Washer, #4 Splitlock	2190-0003	2
19	Washer, #4 Flat	3050-0716	2
20	Washer, #4, Splitlock	2190-0003	2
21	Screw, #4 x 3/8" Pozidrive	2200-0143	2
22	Screw, Tri-oral	0624-0297	1
23	Platen Ass'y	09866-60003	1
24	Platen, lower	4320-0263	1
25	Bucket, Back	09866-26802	1
26	Lid Ass'y	09866-24101	1
27	Bracket, Latch	09866-01219	1
28	Locknut, #4 Hex	2260-0003	2
29	Rubber Grommet	0400-0002	1
30	Pin Ass'y	09866-69201	1
31	Roller, Paper	4320-0262	1

EXPLODED VIEW PARTS LIST (cont'd)

REF. NO.	DESCRIPTION	P/N	TQ
36	Plate, Left-side	1530-1720	1
39	Screw, #6 Flathead	2360-0184	2
	Washer, External Cone	2190-0047	2
42	Gear Ass'y	5060-7437	2
43	Washer, #6 Flat	2190-0142	2
44	Washer, #6 Splitlock	2190-0918	2
45	Screw, #6 Pozidrive	2360-0197	2
46	Belt, Drive	1500-0342	2
47	Guide, Paper	09866-06801	1
48	Spring, Load	1460-0565	8
49	Screw, #6 Flathead	2360-0316	10
50	Screw, #6 x 5/8" Pozidrive	2360-0203	2
51	Plate, Head (RH)	09866-04309	1
	Plate, Head (LH)	09866-04308	1
52	Adjusting Cam	1500-0306	2
53	Washer, #6 Flat	2190-0918	2
54	Hex-Nut, selflocking	0590-0025	2
56	Load Bar	09866-21201	1
57	Pivot Rod	09866-23701	1
58	Printhead Ass'y (A7)	09866-67908	4
59	Tear Bracket	09866-01208	2
60	Screw, #4 x 5/16" Flathead	2200-0142	2
61	Washer, External Cone	2190-0724	2
62	Heatsink Ass'y (A8)	09866-60006	1
63	Load Screw	09866-22301	8

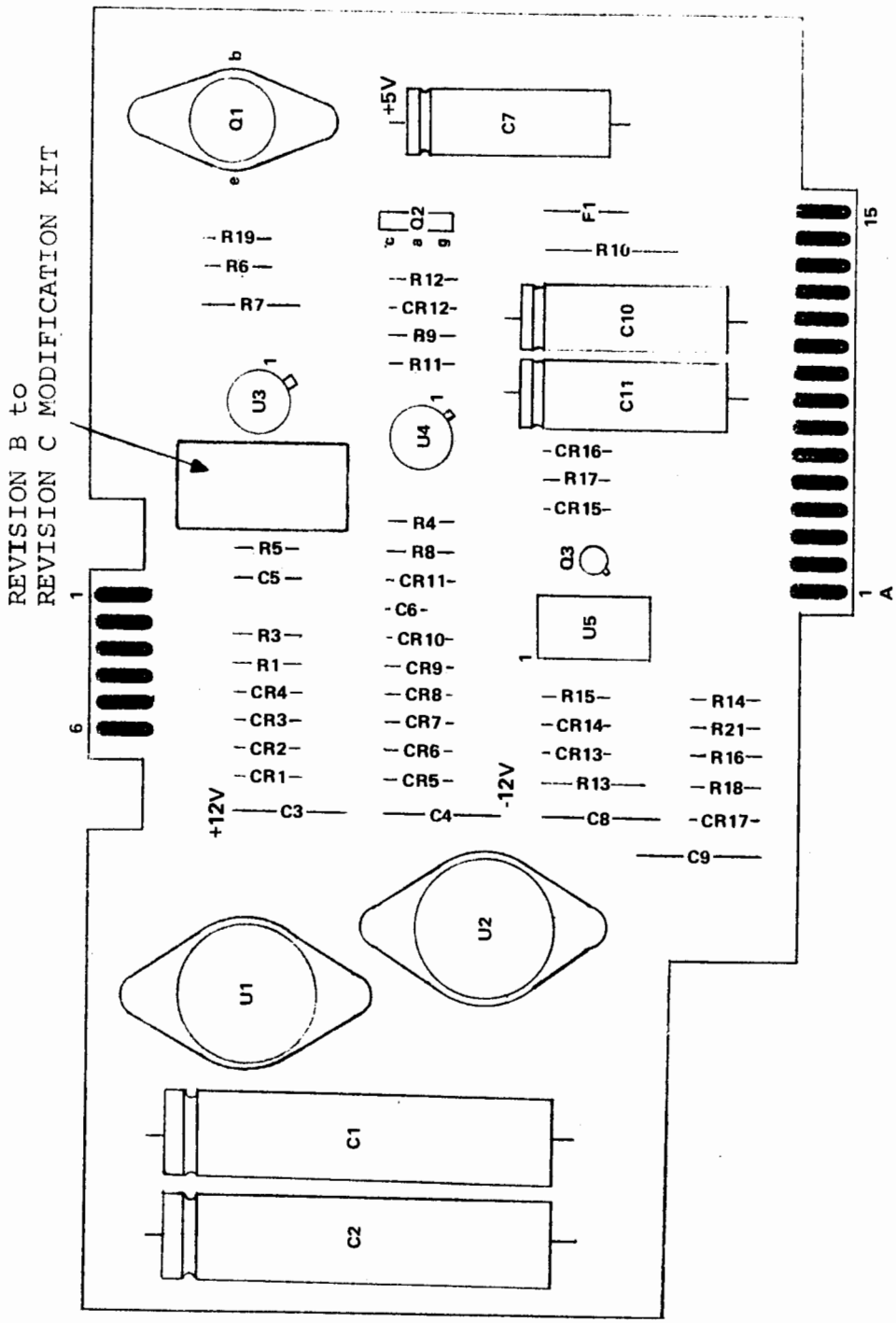

COMPONENT DESIGNATOR
09866-66503 A3 Assembly

5-16

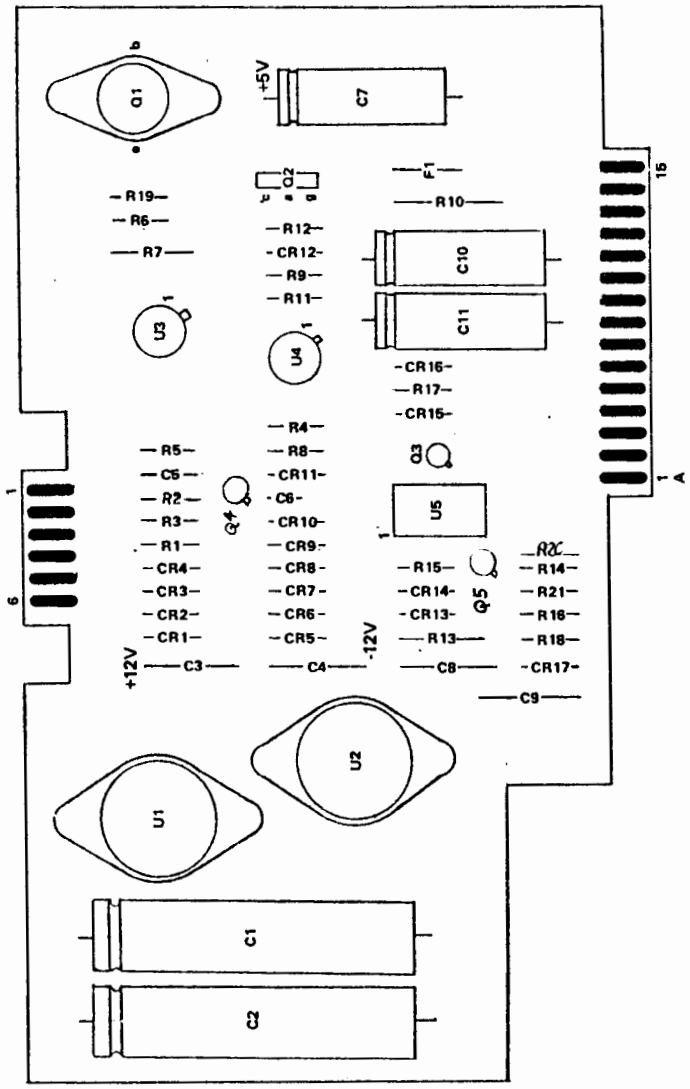

COMPONENT DESIGNATOR
09866-66503 A3 Assembly

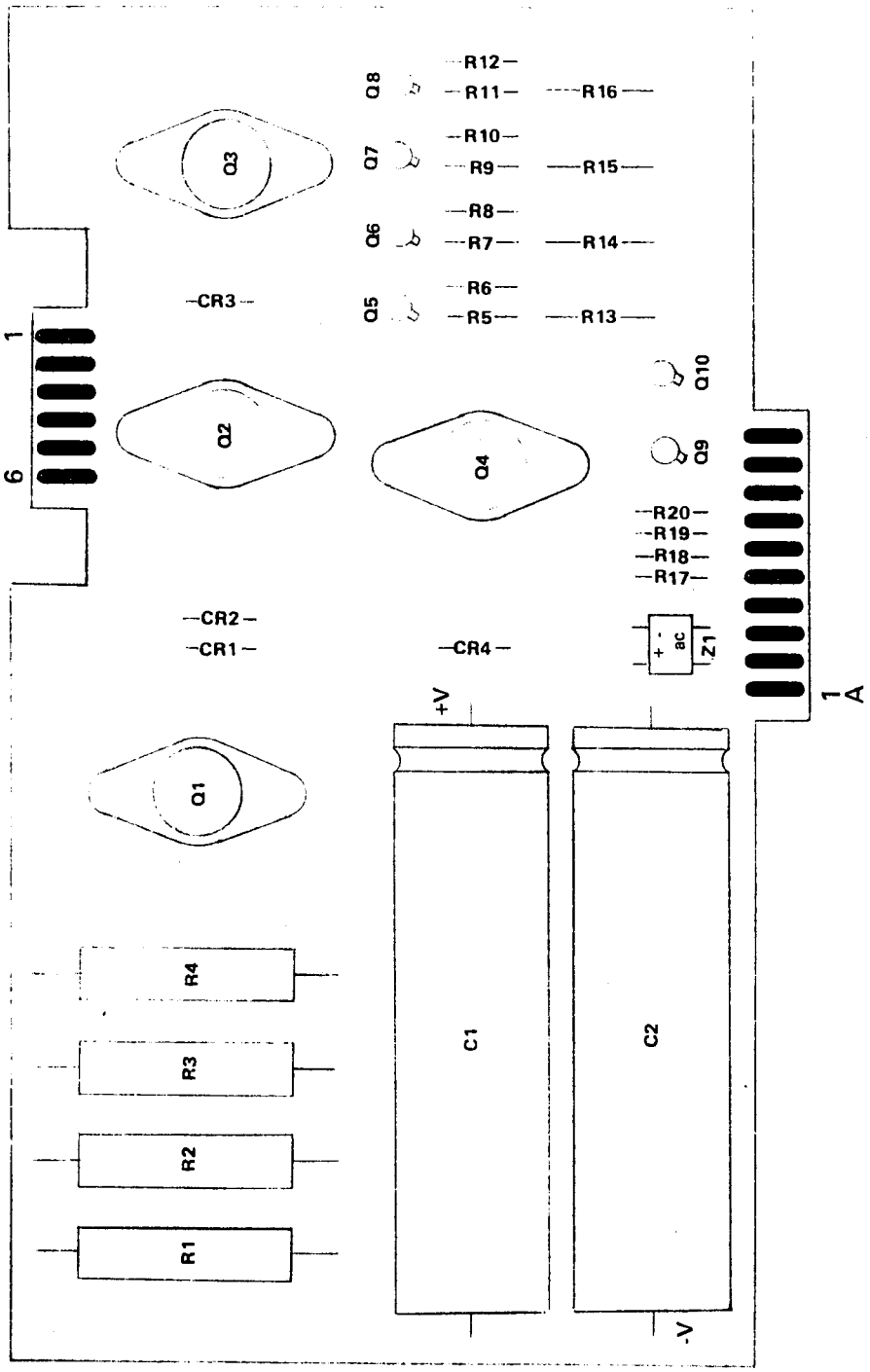

COMPONENT DESIGNATOR
09866-66505 A5 Assembly

Computer Museum

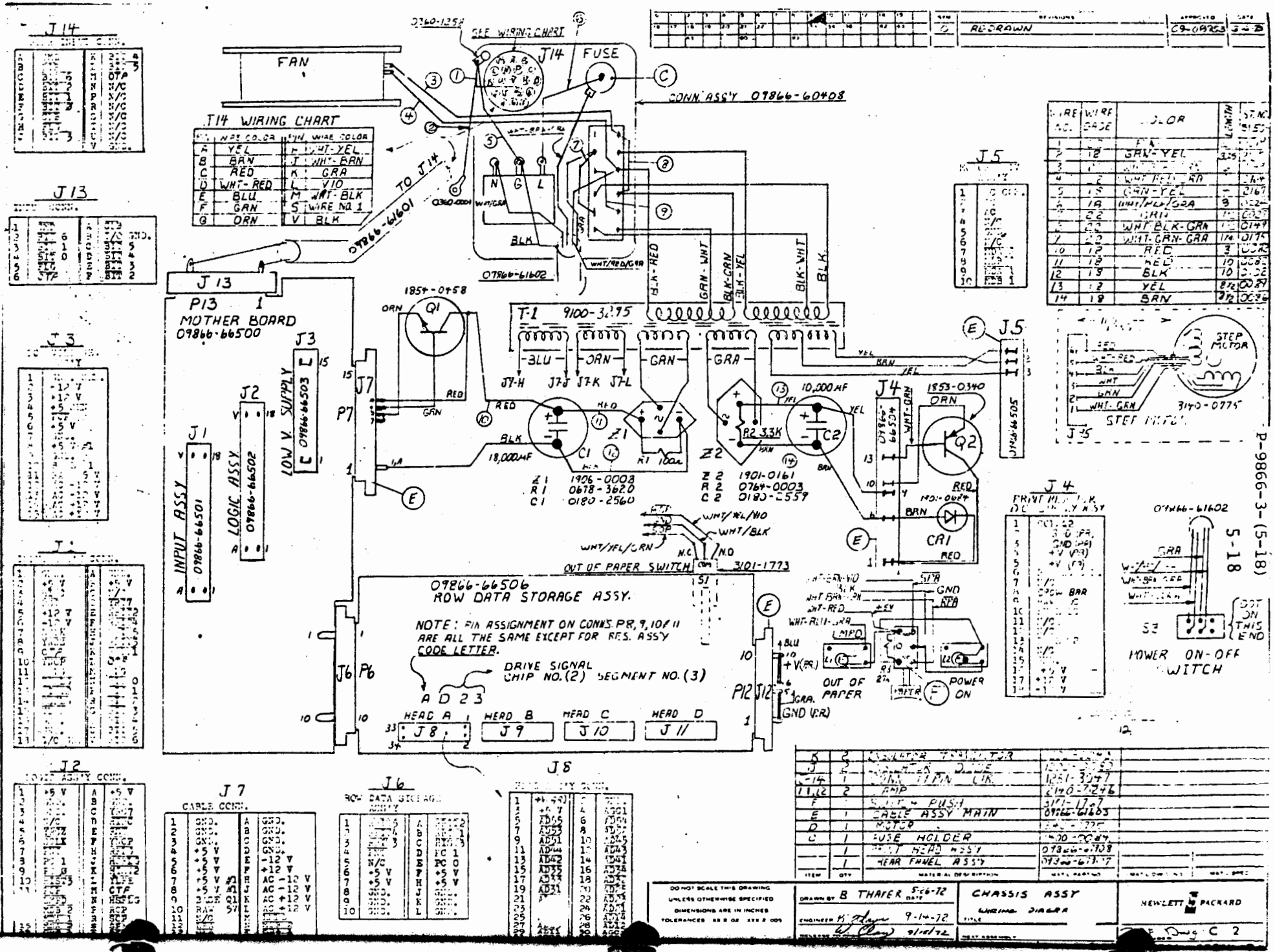

ITEM	QTY	MATERIAL DESCRIPTION	MATL PART NO	MATL SPEC
K	2	INSULATOR TRANSISTOR	[illegible]	
J	2	[illegible] DIODE	[illegible]	
14	1	CONN. [illegible] CIR.	1251-3047	
11,12	2	AMP	2140-7246	
F	1	SWITCH PUSH	3101-1767	
E	1	CABLE ASSY MAIN	09866-61603	
D	1	MOTOR	[illegible]	
C	1	FUSE HOLDER	[illegible]	
	1	[illegible] HEAD ASSY	09866-[illegible]	
	1	REAR PANEL ASSY	09866-[illegible]	

P-9866-3-(5-18)

5-18

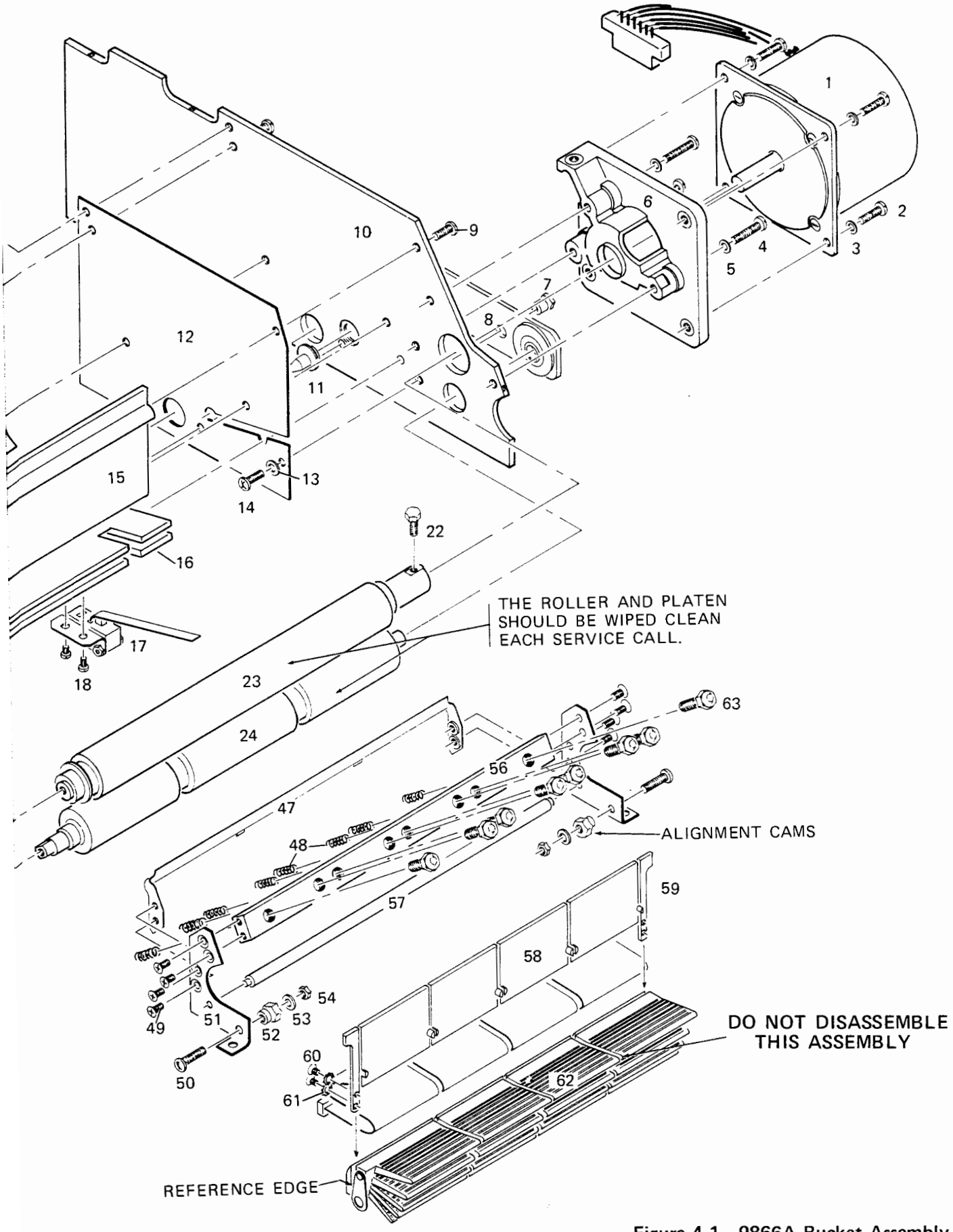

Figure 4-1. 9866A Bucket Assembly

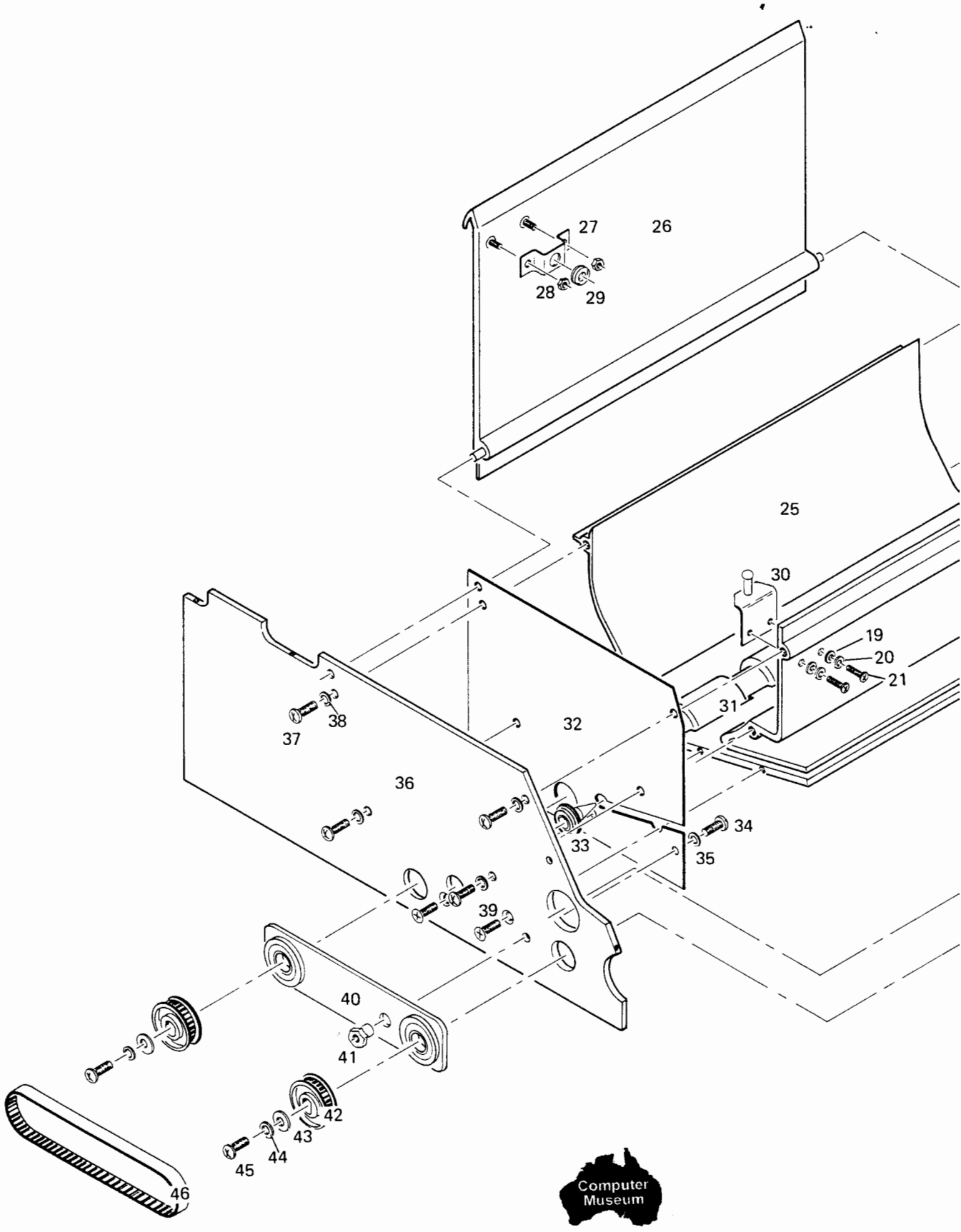

Computer Museum

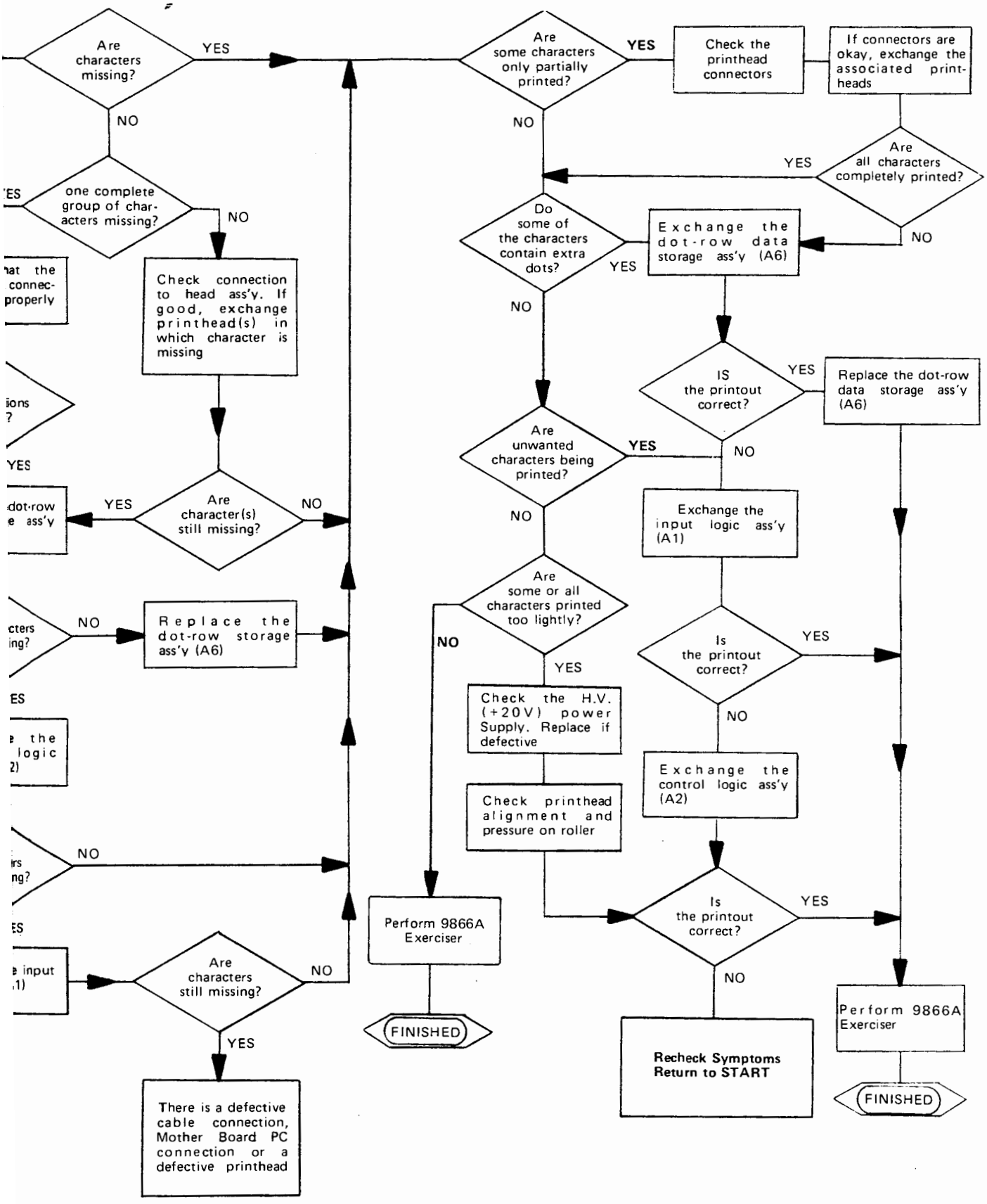

Figure 5-1.

9866A Troubleshooting Tree

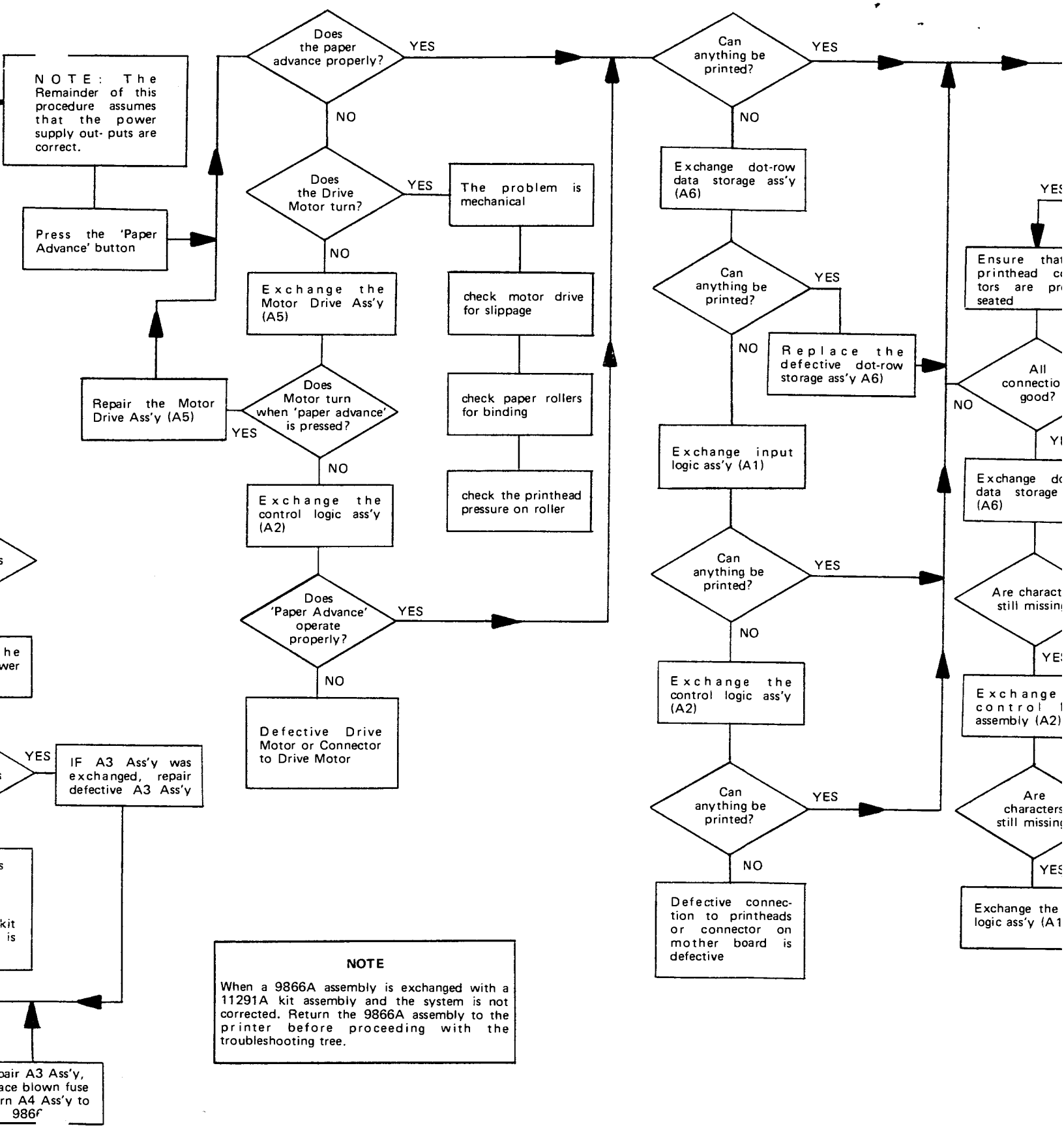
NOTE: The Remainder of this procedure assumes that the power supply out- puts are correct.
Press the 'Paper Advance' button
Does the paper advance properly?
YES
NO
Does the Drive Motor turn?
YES
The problem is mechanical
check motor drive for slippage
check paper rollers for binding
check the printhead pressure on roller
NO
Exchange the Motor Drive Ass'y (A5)
Repair the Motor Drive Ass'y (A5)
Does Motor turn when 'paper advance' is pressed?
YES
NO
Exchange the control logic ass'y (A2)
Does 'Paper Advance' operate properly?
YES
NO
Defective Drive Motor or Connector to Drive Motor
Can anything be printed?
YES
NO
Exchange dot-row data storage ass'y (A6)
Can anything be printed?
YES
NO
Replace the defective dot-row storage ass'y A6)
Exchange input logic ass'y (A1)
Can anything be printed?
YES
NO
Exchange the control logic ass'y (A2)
Can anything be printed?
YES
NO
Defective connec- tion to printheads or connector on mother board is defective
YES
Ensure that printhead co tors are pr seated
All connectio good?
NO
Exchange do data storage (A6)
Are charact still missin
YES
Exchange control assembly (A2)
Are characters still missin
YES
Exchange the logic ass'y (A1
YES
IF A3 Ass'y was exchanged, repair defective A3 Ass'y
pair A3 Ass'y, ace blown fuse rn A4 Ass'y to 9866
NOTE
When a 9866A assembly is exchanged with a 11291A kit assembly and the system is not corrected. Return the 9866A assembly to the printer before proceeding with the troubleshooting tree.

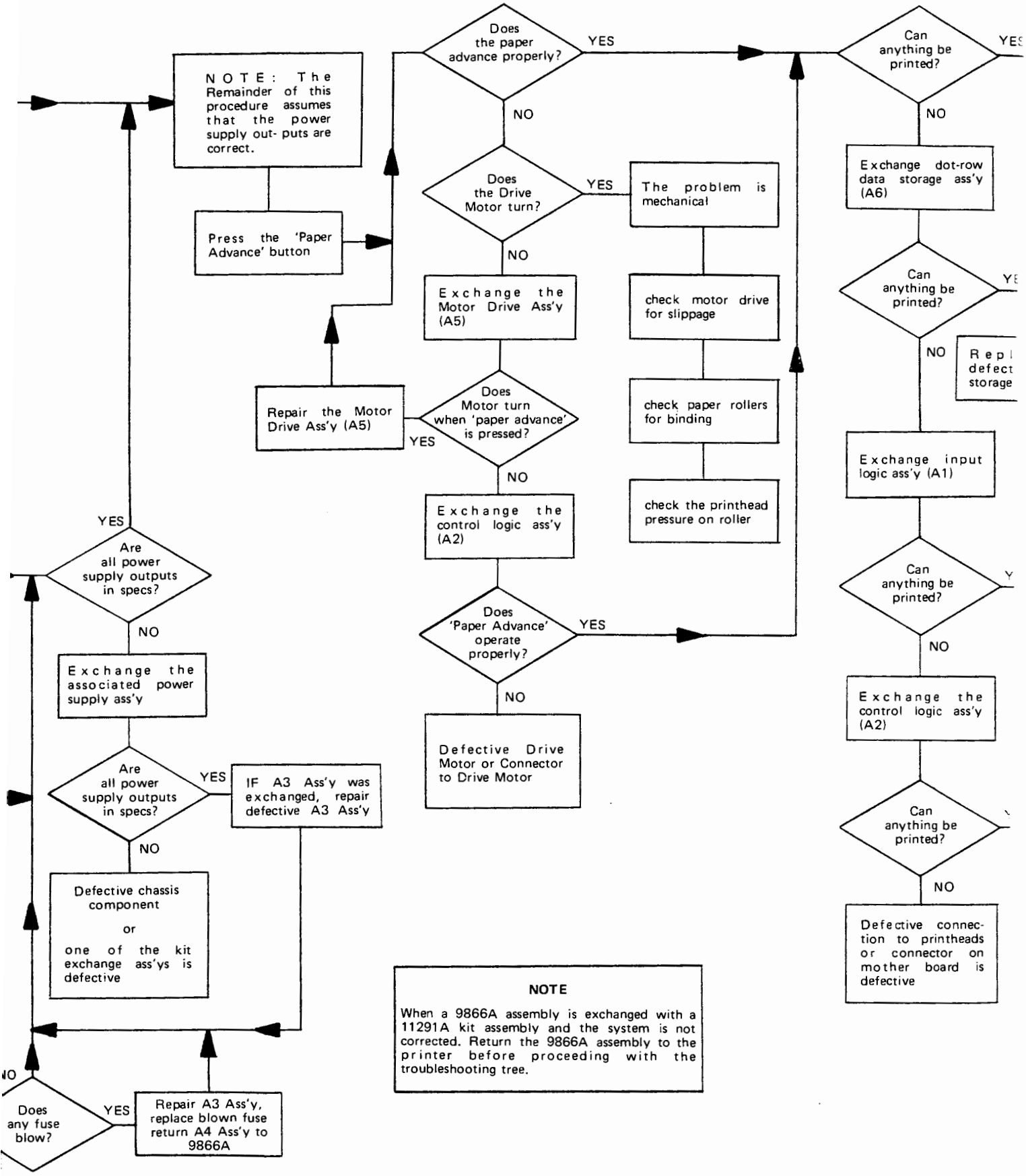
NOTE: The Remainder of this procedure assumes that the power supply out- puts are correct.
Press the 'Paper Advance' button
Does the paper advance properly?
YES
NO
Does the Drive Motor turn?
YES
The problem is mechanical
check motor drive for slippage
check paper rollers for binding
check the printhead pressure on roller
NO
Exchange the Motor Drive Ass'y (A5)
Repair the Motor Drive Ass'y (A5)
Does Motor turn when 'paper advance' is pressed?
YES
NO
Exchange the control logic ass'y (A2)
Does 'Paper Advance' operate properly?
YES
NO
Defective Drive Motor or Connector to Drive Motor
Can anything be printed?
YES
NO
Exchange dot-row data storage ass'y (A6)
Can anything be printed?
NO
Exchange input logic ass'y (A1)
Can anything be printed?
NO
Exchange the control logic ass'y (A2)
Can anything be printed?
NO
Defective connection to printheads or connector on mother board is defective
Are all power supply outputs in specs?
YES
NO
Exchange the associated power supply ass'y
Are all power supply outputs in specs?
YES
IF A3 Ass'y was exchanged, repair defective A3 Ass'y
NO
Defective chassis component
or
one of the kit exchange ass'ys is defective
Does any fuse blow?
YES
Repair A3 Ass'y, replace blown fuse return A4 Ass'y to 9866A
NOTE
When a 9866A assembly is exchanged with a 11291A kit assembly and the system is not corrected. Return the 9866A assembly to the printer before proceeding with the troubleshooting tree.

Computer Museum

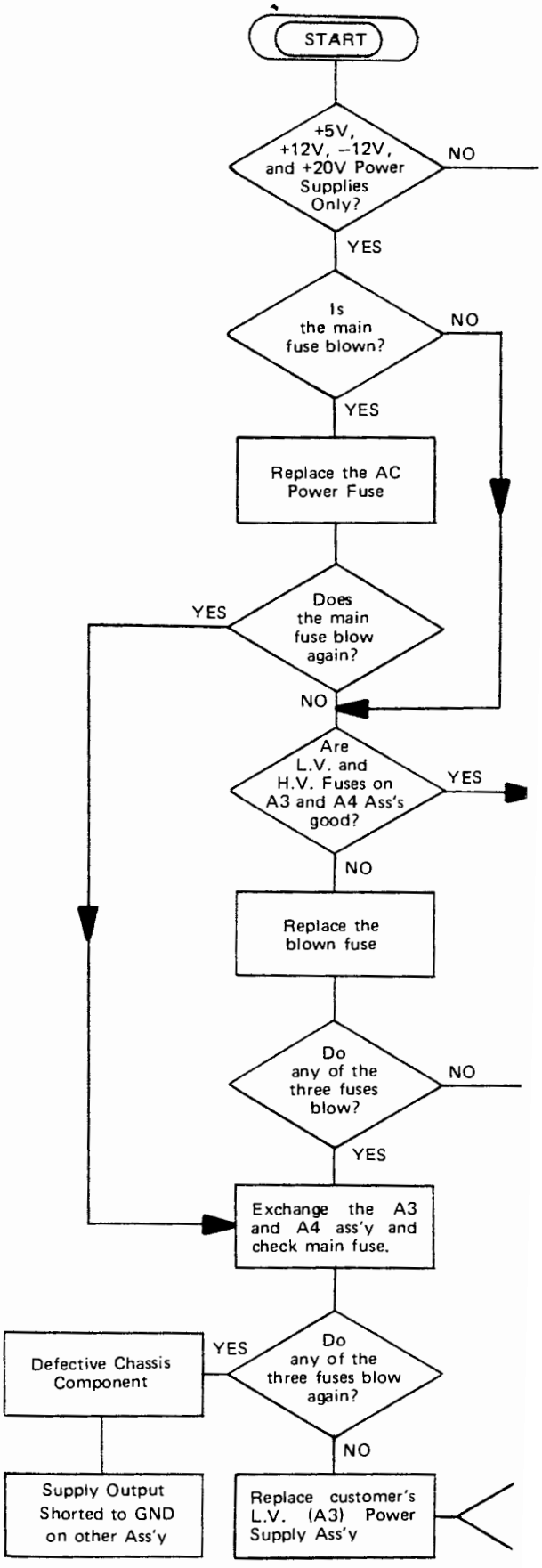

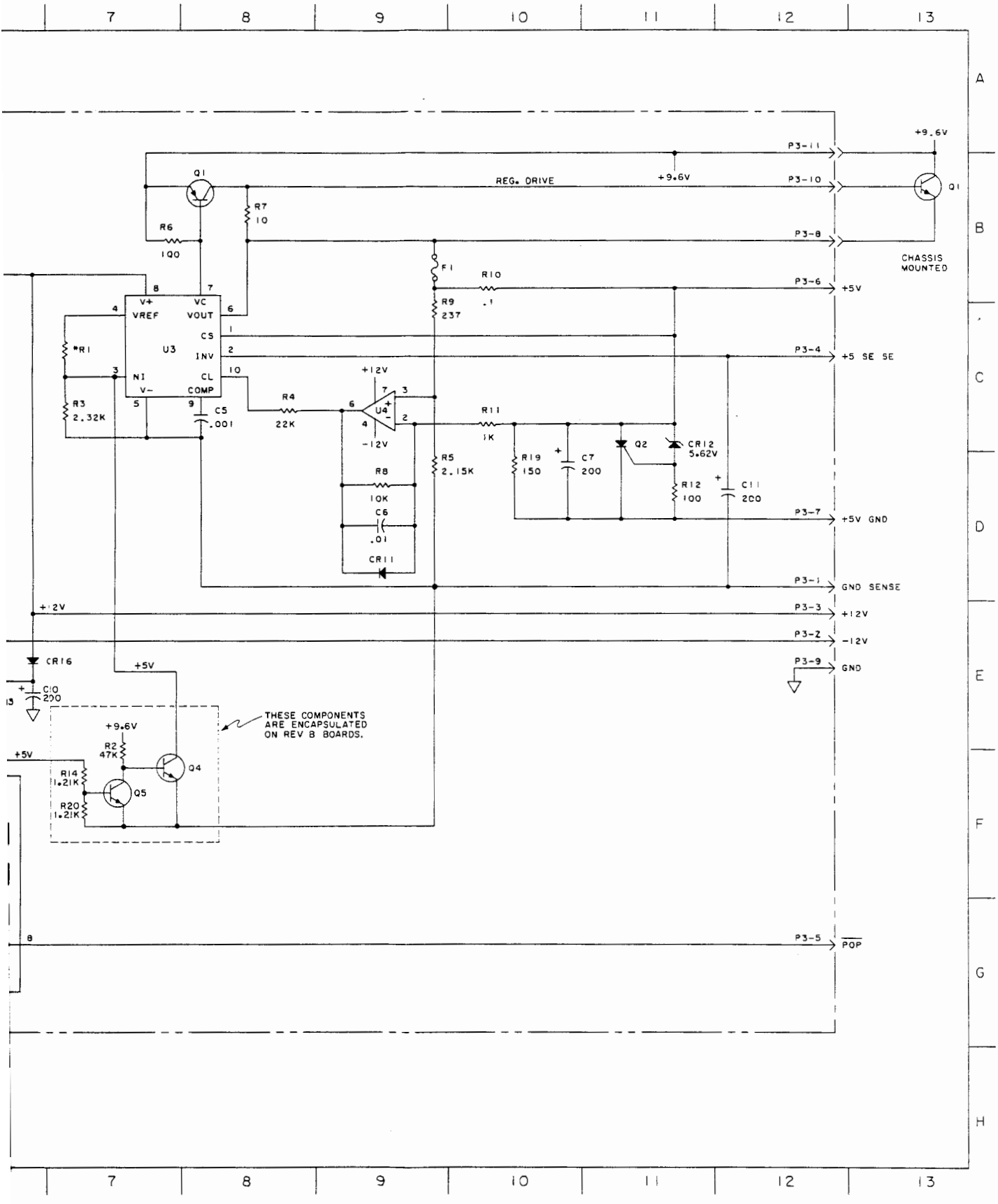

Figure 5-2. Low Voltage Power Supplies

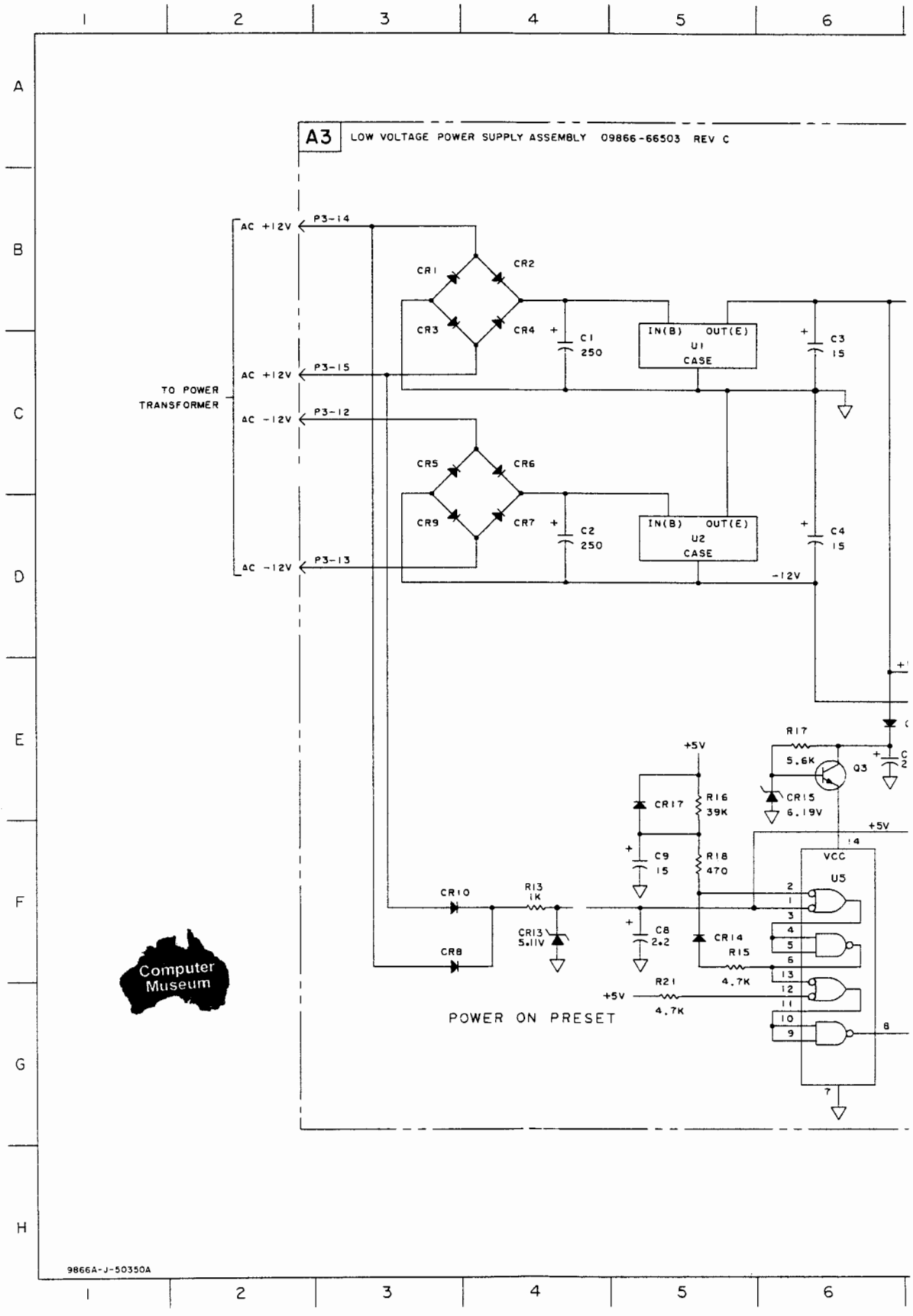
A3 LOW VOLTAGE POWER SUPPLY ASSEMBLY 09866-66503 REV C
AC +12V
P3-14
AC +12V
P3-15
TO POWER TRANSFORMER
AC -12V
P3-12
AC -12V
P3-13
CR1
CR2
CR3
CR4
C1 250
IN(B) OUT(E) U1 CASE
C3 15
CR5
CR6
CR9
CR7
C2 250
IN(B) OUT(E) U2 CASE
C4 15
-12V
+5V
R17 5.6K
Q3
CR15 6.19V
CR17
R16 39K
C9 15
R18 470
CR10
R13 1K
CR13 5.11V
C8 2.2
CR14
R15 4.7K
R21 4.7K
+5V
VCC
U5
CR8
POWER ON PRESET
9866A-J-50350A

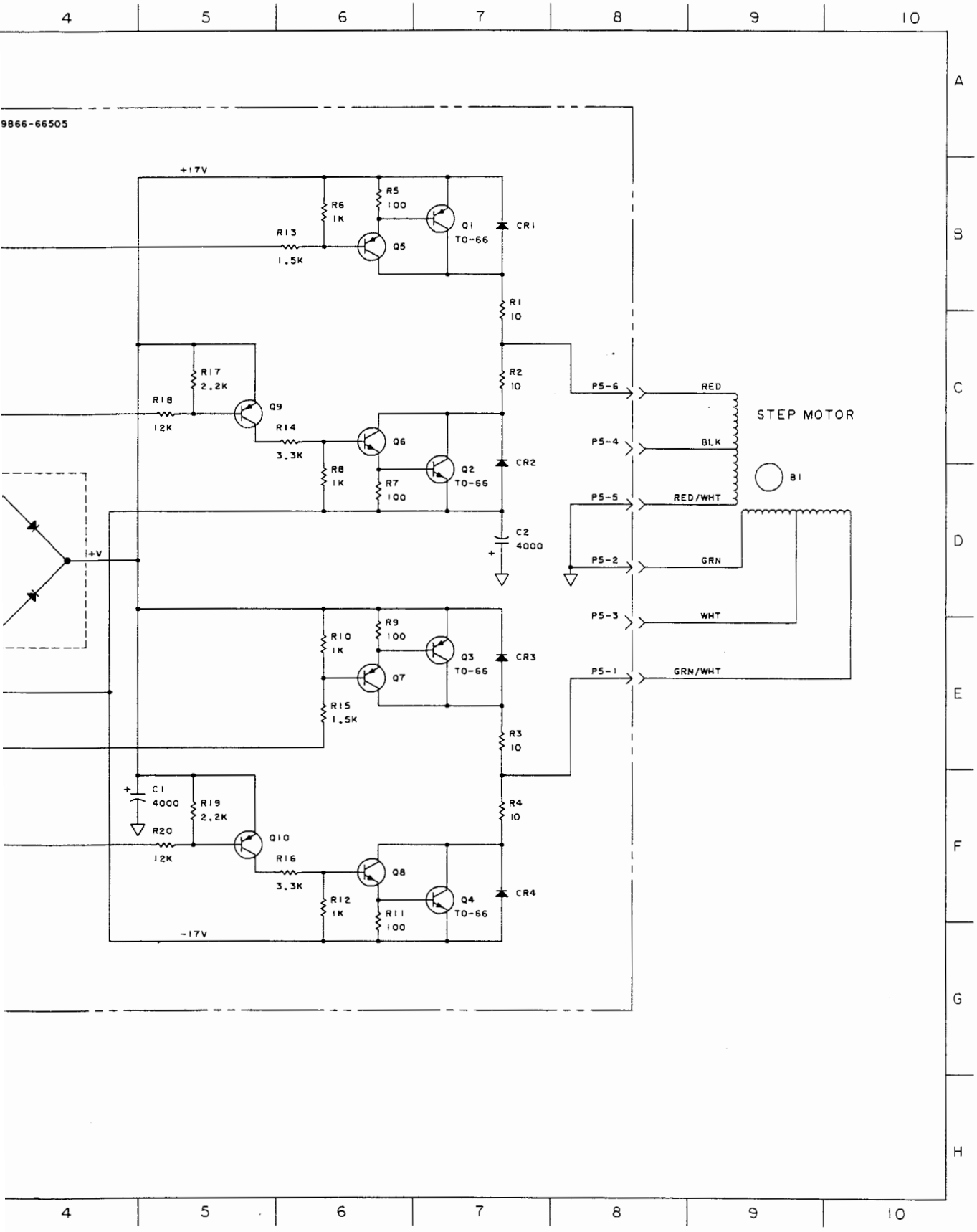

Figure 5-3. Motor Drive Assembly

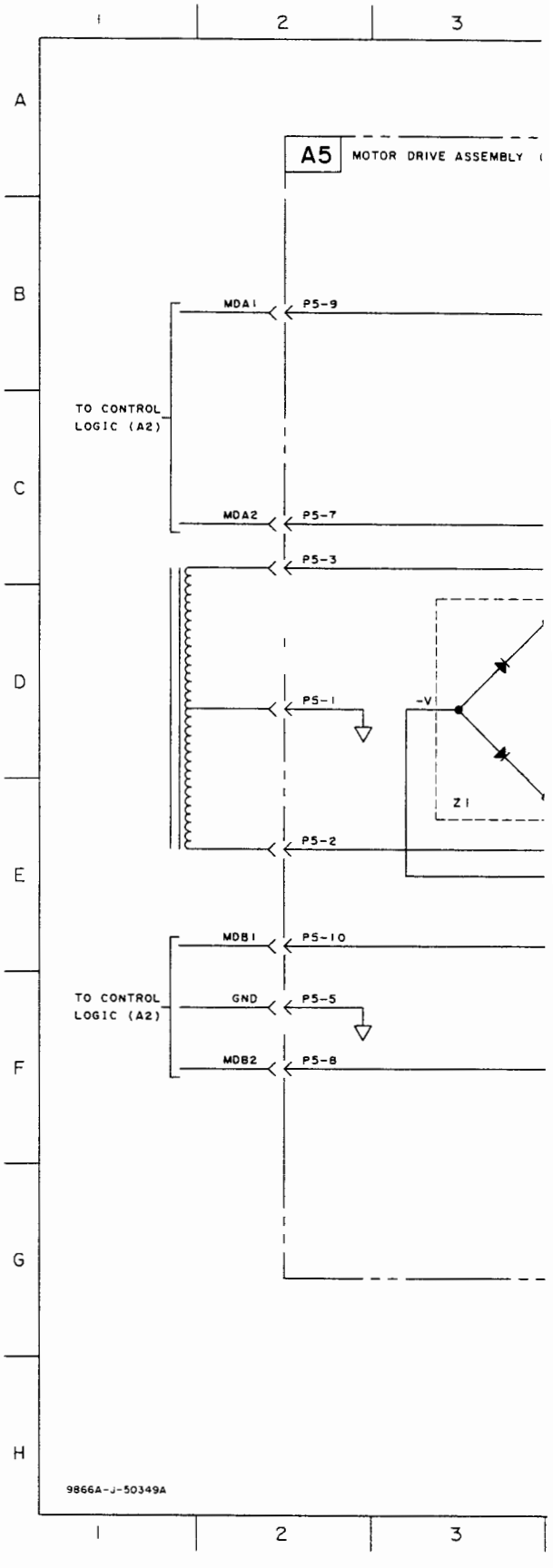

Computer Museum